MIAMI-DADE COUNTY
PRODUCT CONTROL SECTION
11805 SW 26 Street, Room 208
Miami, Florida 33175-2474
T (786) 315-2590 F (786) 315-2599
www.miamidade.gov/building

DEPARTMENT OF REGULATORY AND ECONOMIC RESOURCES (RER)
BOARD AND CODE ADMINISTRATION DIVISION

NOTICE OF ACCEPTANCE (NOA)

Nailor Industries Inc.
4714 Winfield Road
Houston, TX 77039

SCOPE: This NOA is being issued under the applicable rules and regulations governing the use of construction materials. The documentation submitted has been reviewed and accepted by Miami-Dade County RER-Product Control Section to be used in Miami Dade County and other areas where allowed by the Authority Having Jurisdiction (AHJ).

This NOA shall not be valid after the expiration date stated below. The Miami-Dade County Product Control Section (In Miami Dade County) and/or the AHJ (in areas other than Miami Dade County) reserve the right to have this product or material tested for quality assurance purposes. If this product or material fails to perform in the accepted manner, the manufacturer will incur the expense of such testing and the AHJ may immediately revoke, modify, or suspend the use of such product or material within their jurisdiction. RER reserves the right to revoke this acceptance if it is determined by Miami-Dade County Product Control Section that this product or material fails to meet the requirements of the applicable building code.

This product is approved as described herein and has been designed to comply with the Florida Building Code, including the High Velocity Hurricane Zone.

DESCRIPTION: Model 1606CM Aluminum Louver System

APPROVAL DOCUMENT: Drawing No. **1606CM-NOA**, titled "BOM, Notes, Anchors, Elevation, Mull Details, Assembly Details, Head/Sill, Jamb, Profiles", sheets 1 through 8 of 8, prepared by manufacturer, dated 05/27/2021, signed and sealed by Lucas A. Turner, P.E. on 10/04/2023, bearing the Miami-Dade County Product Control Approval stamp with the Notice of Acceptance number and expiration date by the Miami-Dade County Product Control Section.

MISSILE IMPACT RATING: Large and Small Missile Impact Resistant

LABELING: Each unit shall bear a permanent label with the manufacturer's name or logo, Houston, TX, model/series, and following statement: "Miami-Dade County Product Control Approved", unless otherwise noted herein.

LIMITATION: This system is to be installed in a location where the room behind the louver is designed to drain water penetrating into the room, and the room will house water resistant/waterproof equipment, components, or supplies.

RENEWAL of this NOA shall be considered after a renewal application has been filed and there has been no change in the applicable building code negatively affecting the performance of this product.

TERMINATION of this NOA will occur after the expiration date or if there has been a revision or change in the materials, use, and/or manufacture of the product or process. Misuse of this NOA as an endorsement of any product, for sales, advertising or any other purposes shall automatically terminate this NOA. Failure to comply with any section of this NOA shall be cause for termination and removal of NOA.

ADVERTISEMENT: The NOA number preceded by the words Miami-Dade County, Florida, and followed by the expiration date may be displayed in advertising literature. If any portion of the NOA is displayed, then it shall be done in its entirety.

INSPECTION: A copy of this entire NOA shall be provided to the user by the manufacturer or its distributors and shall be available for inspection at the job site at the request of the Building Official.

This NOA consists of this page 1 and evidence page E-1, as well as approval document mentioned above.

The submitted documentation was reviewed by **Carlos M. Utrera, P.E.**

Nailor Industries Inc.

NOTICE OF ACCEPTANCE: EVIDENCE SUBMITTED

A. DRAWINGS

1. Drawing No. **1606CM-NOA**, titled "BOM, Notes, Anchors, Elevation, Mull Details, Assembly Details, Head/Sill, Jamb, Profiles", sheets 1 through 8 of 8, prepared by manufacturer, dated 05/27/2021, signed and sealed by Lucas A. Turner, P.E. on 10/04/2023.

B. TESTS

1. Test reports on: 1) Uniform Static Air Pressure Test, Loading per FBC, TAS 202-94
2) Large Missile Impact Test per FBC, TAS 201-94
3) Cyclic Wind Pressure Loading per FBC, TAS 203-94
along with installation diagram of Model 1606CM Louver Systems, prepared by Intertek, Test Report No. **K4982.01-801-18-R0**, dated 04/08/2022, signed and sealed by Tyler Westerling, P.E.

2. Test Report on Test Method for Louvers Impacted by Wind Borne Debris per ANSI/AMCA 540-13 on a Model 1606CM Aluminum Louver Systems, prepared by Intertek, Test Report No. **K4980.01-801-18-R1,** dated 10/20/2021, revised on 03/01/2022, signed and sealed by Tyler Westerling, P.E.

3. Test Report on High Velocity Wind Driven Rain Resistance per ANSI/AMCA 550-15 on a Model 1606CM Aluminum Louver System, prepared by Intertek, Test Report No. **K4981.01-801-44-R1,** dated 05/13/2021, revised on 05/17/2021, signed and sealed by Tyler Westerling, P.E.

C. CALCULATIONS

1. Louver structural calculations, dated 08/09/2023, prepared by Turner Engineering Consulting, Inc., signed and sealed by Lucas A. Turner, P.E.

D. QUALITY ASSURANCE

1. Miami-Dade Department of Regulatory and Economic Resources (RER).

E. MATERIAL CERTIFICATIONS

1. None.

F. STATEMENTS

1. Statement letter of code conformance to the **FBC, 7th Edition (2020)** and **FBC, 8th Edition (2023),** issued by Turner Engineering Consulting, Inc., dated 08/09/2023, signed and sealed by Lucas A. Turner, P.E.

2. Statement letter of no financial interest issued by Turner Engineering Consulting, Inc., dated 08/09/2023, signed and sealed by Lucas A. Turner, P.E.

Carlos M. Utrera, P.E.
Product Control Examiner
NOA No. 23-0823.04
Expiration Date: November 2, 2028
Approval Date: November 2, 2023

GENERAL NOTES

1. THE 1606CM LOUVER SYSTEM SHOWN IN THE CONFIGURATIONS HEREIN IS DESIGNED AND MANUFACTURED TO COMPLY WITH THE REQUIREMENTS OF THE 7TH EDITION (2020) AND 8TH EDITION (2023) FLORIDA BUILDING CODES INCLUDING THE HIGH VELOCITY HURRICANE ZONE PROVISIONS, FOR APPLICATIONS WITH DESIGN PRESSURE (ASD) REQUIREMENTS OF 120 PSF OR LESS.
2. THIS PRODUCT HAS BEEN TESTED IN ACCORDANCE WITH TAS 100A, TAS 201, TAS 202, TAS 203, AMCA 540 AND AMCA 550. FOR FULL PRODUCT TESTING DETAILS SEE INTERTEK TEST REPORTS K4980.01-801-18-R1, K4981.01-801-44-R1, AND K4982.01-801-18-R0.
3. THIS PRODUCT AS SHOWN IN THIS DRAWING IS MISSILE LEVEL D LARGE MISSILE IMPACT RESISTANT, AND DOES NOT REQUIRE THE USE OF IMPACT PROTECTIVE DEVICES (SHUTTERS) IN WINDBORNE DEBRIS REGIONS.
4. THIS LOUVER SYSTEM HAS BEEN TESTED IN ACCORDANCE WITH TAS 100A TO PREVENT WIND-DRIVEN RAIN FROM PENETRATING THE SPACE BEHIND THE LOUVER FOR WIND SPEEDS UP TO 110 MPH AND INSTALLATION IN HEIGHTS UP TO 33 FT.
5. THIS LOUVER SYSTEM IS NON-BEARING AND IS NOT DESIGNED TO WITHSTAND BUILDING DEAD LOADS.
6. THE 4/3 ALLOWABLE STRESS INCREASE FACTOR (SHORT-TERM INCREASE FACTOR) HAS NOT BEEN USED IN THE ANCHOR ANALYSIS FOR THIS SYSTEM. THE 1.6 Cd FACTOR WAS USED IN THE ANALYSIS OF ANCHORAGE INTO WOOD SUBSTRATE.
7. THE OPENING SUBSTRATE MATERIALS (FRAMING, MASONRY, BUCKS) AND ATTACHMENT OF BUCKS TO THE SUBSTRATE ARE BY OTHERS AND SHALL BE VERIFIED BY THE ARCHITECT OR ENGINEER OF RECORD OR AS APPROVED BY THE AUTHORITY HAVING JURISDICTION (AHJ). BUCKING, OPENINGS, & BUCKING FASTENERS MUST BE PROPERLY DESIGNED & INSTALLED BY OTHERS IN ACCORDANCE WITH THE FBC TO TRANSFER SUPERIMPOSED LOADS TO THE STRUCTURE.
8. DISSIMILAR MATERIALS THAT COME INTO CONTACT SHALL BE COATED OR OTHERWISE PROTECTED TO PREVENT GALVANIC REACTIONS. WOOD BUCKS, IF USED, SHALL BE PRESSURE TREATED, WITH EITHER A TREATMENT OR COATING COMPATIBLE WITH THIS PRODUCT.
9. ANCHORAGE NOTES: INSTALL PRODUCTS WITH MAXIMUM SHIM GAP, MINIMUM EDGE DISTANCE AND EMBEDMENT, AND WITH FASTENER TYPE AS SHOWN IN THE DETAILS AND AS INDICATED IN TABLE 1 FOR THE APPROPRIATE SUBSTRATE, OR AS APPROVED, SIGNED, AND SEALED BY A FLORIDA-REGISTERED PROFESSIONAL ENGINEER ON A SITE-SPECIFIC BASIS. ALL ANCHORS USED SHALL BE OF A MATERIAL OR HAVE A COATING COMPATIBLE WITH THE OPENING SUBSTRATE AND ALL OTHER LOUVER MATERIALS. INSTALL ONE ANCHOR AT EACH LOCATION SHOWN IN THE ELEVATION. INSTALL SHIMS AT EACH ANCHOR LOCATION WHERE A GAP OF 1/16" OR GREATER EXISTS BETWEEN PRODUCT FRAME AND SUBSTRATE. SHIMS SHALL BE LOAD-BEARING (PLASTIC OR METALLIC) AND CAPABLE OF TRANSFERRING LOADS TO SUBSTRATE. SPECIFIED ANCHOR EMBEDMENT TO SUBSTRATE SHALL BE BEYOND WALL FINISH OR STUCCO.

TABLE 1. INSTALLATION ANCHOR REQUIREMENTS (NOTE: THIS TABLE APPLIES TO ANCHORAGE OF 3X6X1/4 MULL AND JAMB CLIPS DIRECTLY TO SUBSTRATE, AS WELL AS 4X4X3/8 MOUNTING ANGLES TO SUBSTRATE)

ANCHOR ID	OPENING SUBSTRATE	ANCHOR TO OPENING FASTENER TYPE	MINIMUM EMBEDMENT	MINIMUM EDGE DISTANCE
A	SOLID UNCRACKED CONCRETE (4000 PSI MIN.)	3/8" DEWALT COATED CARBON STEEL SCREW-BOLT+	2 1/2"	1 1/2"
B	GROUT- FILLED CMU (ASTM C-90 WITH 1,500 PSI MIN. GROUT)	3/8" DEWALT COATED CARBON STEEL SCREW-BOLT+	3 1/4"	1 1/2"
C	1/4" THICK MIN. A36 MIN. STEEL	3/8"-16 BOLT, 300 SERIES COND. CW SS (65ksi MIN. YIELD)	1/4"	9/16"
D	SOUTHERN PINE (SG = 0.55 MIN.)	3/8" LAG SCREW, 300 SERIES COND. CW SS (65ksi MIN. YIELD)	3"	1 1/2"
E	SOLID UNCRACKED CONCRETE (4000 PSI MIN.)	1/2" DEWALT COATED CARBON STEEL SCREW-BOLT+	2 1/2"	1 3/4"
F	SOUTHERN PINE (SG = 0.55 MIN.)	1/2" LAG SCREW, 300 SERIES COND. CW SS (65ksi MIN. YIELD)	3"	2"

TABLE 2. 3X6X1/4 ALUMINUM MULL CLIP (ITEM 157) ATTACHMENT DIRECTLY TO SUBSTRATE, ANCHOR QUANTITY / CLIP LENGTH REQUIREMENTS (SEE TABLE 1 FOR FULL DESCRIPTION OF ANCHOR TYPES / SUBSTRATES)

MULLION DESIGN PRESSURE (PSF)	ANCHOR ID	MAX. LOUVER ACTUAL HEIGHT (IN.)				
		72	84	96	108	120
100	A (3/8" SCREW-BOLT+ / CONC.)	QTY 6 / 12" CLIP	QTY 6 / 12" CLIP	QTY 7 / 12" CLIP	QTY 8 / 15" CLIP	QTY 9 / 15" CLIP
	B (3/8" SCREW-BOLT+ / CMU)	QTY 8 / 15" CLIP	QTY 9 / 15" CLIP	QTY 10 / 18" CLIP	QTY 11 / 18" CLIP	QTY 13 / 21" CLIP
	C (3/8"-16 BOLT / STEEL)	QTY 4 / 9" CLIP	QTY 4 / 9" CLIP	QTY 4 / 9" CLIP	QTY 4 / 9" CLIP	QTY 4 / 9" CLIP
	D (3/8" LAG / WOOD)	QTY 6 / 12" CLIP	QTY 6 / 12" CLIP	QTY 6 / 12" CLIP	QTY 6 / 12" CLIP	QTY 7 / 12" CLIP
	E (1/2" SCREW-BOLT+ / CONC.)	QTY 4 / 9" CLIP	QTY 4 / 9" CLIP	QTY 5 / 9" CLIP	QTY 6 / 12" CLIP	QTY 6 / 12" CLIP
	F (1/2" LAG / WOOD)	QTY 4 / 9" CLIP	QTY 4 / 9" CLIP	QTY 4 / 9" CLIP	QTY 4 / 9" CLIP	QTY 5 / 9" CLIP
110	A (3/8" SCREW-BOLT+ / CONC.)	QTY 6 / 12" CLIP	QTY 7 / 12" CLIP	QTY 8 / 15" CLIP	QTY 9 / 15" CLIP	QTY 10 / 18" CLIP
	B (3/8" SCREW-BOLT+ / CMU)	QTY 8 / 15" CLIP	QTY 10 / 18" CLIP	QTY 11 / 18" CLIP	QTY 12 / 21" CLIP	QTY 14 / 24" CLIP
	C (3/8"-16 BOLT / STEEL)	QTY 4 / 9" CLIP	QTY 4 / 9" CLIP	QTY 4 / 9" CLIP	QTY 4 / 9" CLIP	QTY 4 / 9" CLIP
	D (3/8" LAG / WOOD)	QTY 6 / 12" CLIP	QTY 6 / 12" CLIP	QTY 6 / 12" CLIP	QTY 6 / 12" CLIP	QTY 8 / 15" CLIP
	E (1/2" SCREW-BOLT+ / CONC.)	QTY 4 / 9" CLIP	QTY 5 / 9" CLIP	QTY 5 / 9" CLIP	QTY 6 / 12" CLIP	QTY 7 / 12" CLIP
	F (1/2" LAG / WOOD)	QTY 4 / 9" CLIP	QTY 4 / 9" CLIP	QTY 4 / 9" CLIP	QTY 5 / 9" CLIP	QTY 5 / 9" CLIP
120	A (3/8" SCREW-BOLT+ / CONC.)	QTY 6 / 12" CLIP	QTY 7 / 12" CLIP	QTY 8 / 15" CLIP	QTY 9 / 15" CLIP	QTY 10 / 18" CLIP
	B (3/8" SCREW-BOLT+ / CMU)	QTY 9 / 15" CLIP	QTY 11 / 18" CLIP	QTY 12 / 21" CLIP	QTY 14 / 24" CLIP	QTY 14 / 24" CLIP
	C (3/8"-16 BOLT / STEEL)	QTY 4 / 9" CLIP	QTY 4 / 9" CLIP	QTY 4 / 9" CLIP	QTY 4 / 9" CLIP	QTY 4 / 9" CLIP
	D (3/8" LAG / WOOD)	QTY 6 / 12" CLIP	QTY 6 / 12" CLIP	QTY 7 / 12" CLIP	QTY 7 / 12" CLIP	QTY 9 / 15" CLIP
	E (1/2" SCREW-BOLT+ / CONC.)	QTY 4 / 9" CLIP	QTY 5 / 9" CLIP	QTY 6 / 12" CLIP	QTY 7 / 12" CLIP	QTY 7 / 12" CLIP
	F (1/2" LAG / WOOD)	QTY 4 / 9" CLIP	QTY 4 / 9" CLIP	QTY 5 / 9" CLIP	QTY 5 / 9" CLIP	QTY 6 / 12" CLIP

TABLE OF CONTENTS

SHEET DESCRIPTION
1 NOTES, ANCHOR TABLE 1
2 TYP. ELEVATION, MULLION DETAILS
3 LOUVER ASSEMBLY DETAILS
4 HEAD/SILL INSTALL. DIRECTLY TO SUBSTRATE
5 HEAD/SILL INSTALL. W/ ALUM. MOUNTING ANGLE, 6" WALL
6 HEAD/SILL INSTALL. W/ STEEL MOUNTING ANGLE
7 JAMB INSTALLATION
8 BILL OF MATERIALS, PROFILES

PRODUCT APPROVED
as complying with the Florida Building Code
NOA-No. 23-0823.04
Approval Date 11/02/2023
By
Miami-Dade Product Control

LUCAS A. TURNER LICENSE No. 58201 STATE OF FLORIDA PROFESSIONAL ENGINEER

10/4/2023

LUCAS TURNER, FL PE 58201
TURNER ENGINEERING & CONSULTING, INC.
2428 OLD NATCHEZ TRACE TRL.
CAMDEN, TN, 38320
PH 941-380-1574

Nailor Industries Inc.
4714 Winfield Road
Houston, TX 77039
TEL: 281-590-1172
FAX: 281-590-3086
www.nailor.com

REV	BY	DESCRIPTION	DATE

DWN BY: fcortinas	SCALE: NTS
DATE: 5/27/2021	SHEET: 1 OF 8
SHEET DESCRIPTION: BOM, NOTES, ANCHORS	REV 0
DWG: 1606CM-NOA	

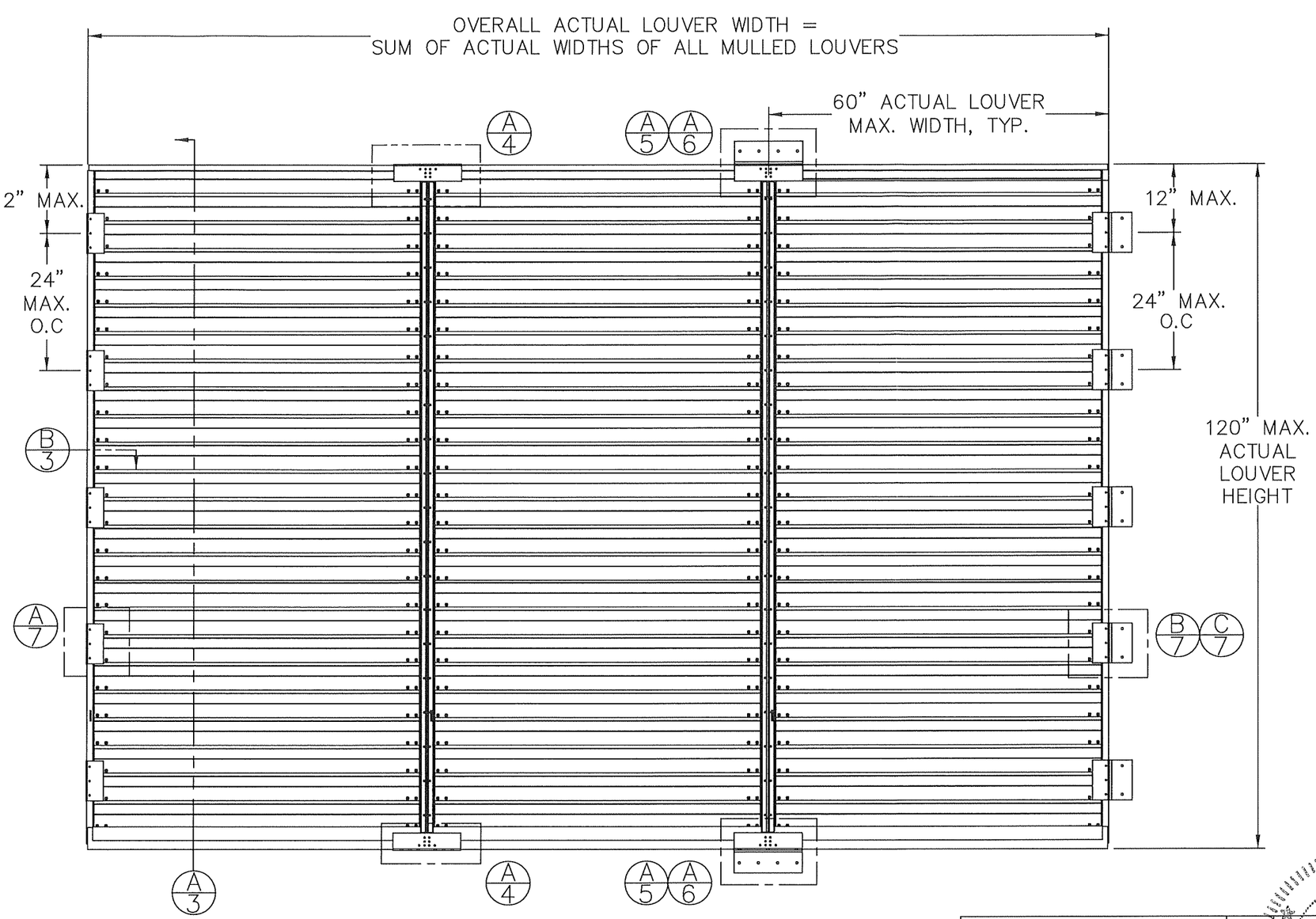

TYPICAL ELEVATION

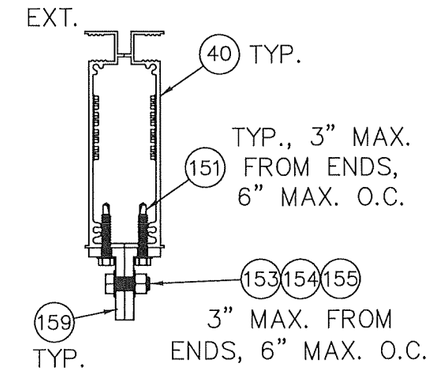

VERTICAL MULLION ASSEMBLY

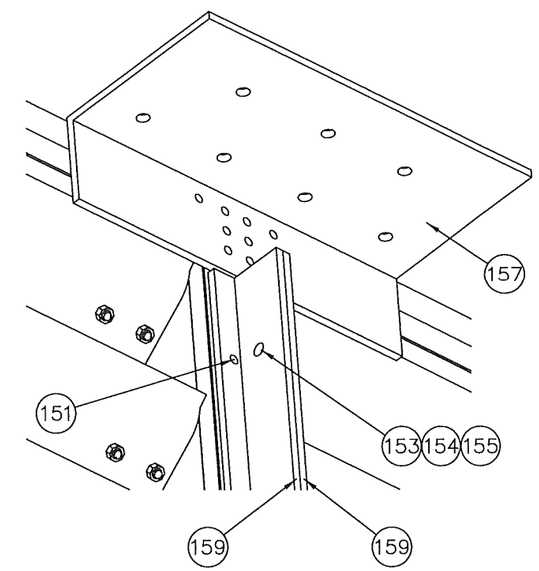

MULLION VIEW FROM INTERIOR

PRODUCT APPROVED
as complying with the Florida Building Code
NOA-No. 23-0823.04
Approval Date 11/02/2023
By
Miami-Dade Product Control

LUCAS A. TURNER
LICENSE
No. 58201
STATE OF FLORIDA
PROFESSIONAL ENGINEER

10/4/2023
LUCAS TURNER, FL PE 58201
TURNER ENGINEERING &
CONSULTING, INC.
2428 OLD NATCHEZ TRACE TRL.
CAMDEN, TN, 38320
PH 941-380-1574

Nailor Industries Inc.
4714 Winfield Road
Houston, TX 77039
TEL: 281-590-1172
FAX: 281-590-3086
www.nailor.com

REV	BY	DESCRIPTION	DATE

DWN BY: fcortinas	SCALE: NTS
DATE: 5/27/2021	SHEET: 2 OF 8
SHEET DESCRIPTION: ELEVATION, MULL DET.	REV 0
DWG: 1606CM-NOA	

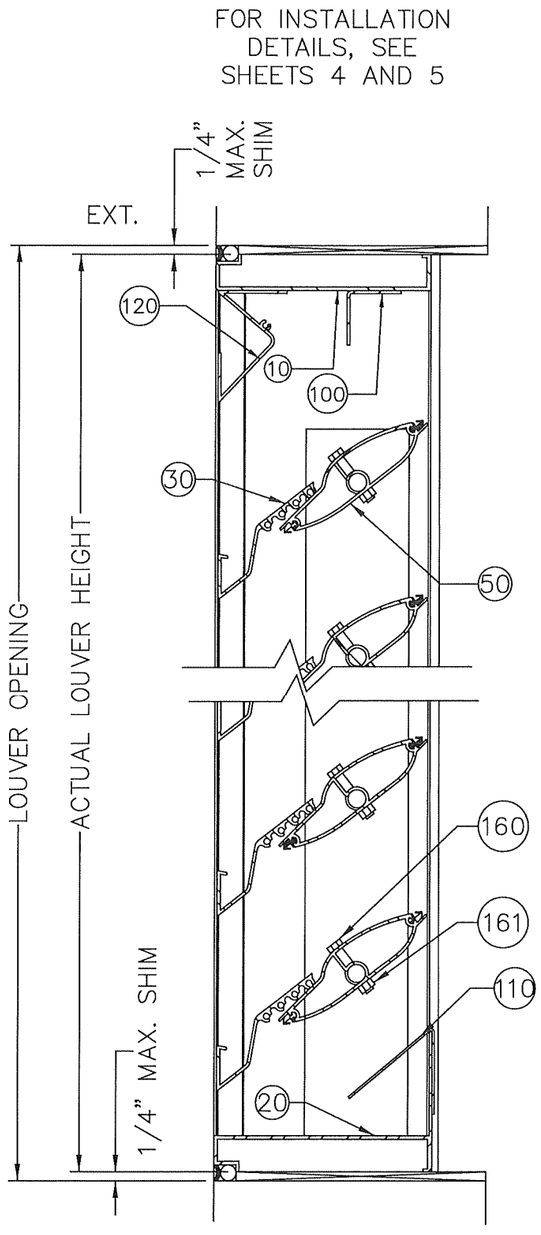

BLADE SUPPORT AND BLADE SUPPORT ANGLE NOT SHOWN FOR CLARITY.

A/3 VERTICAL SECTION DETAIL

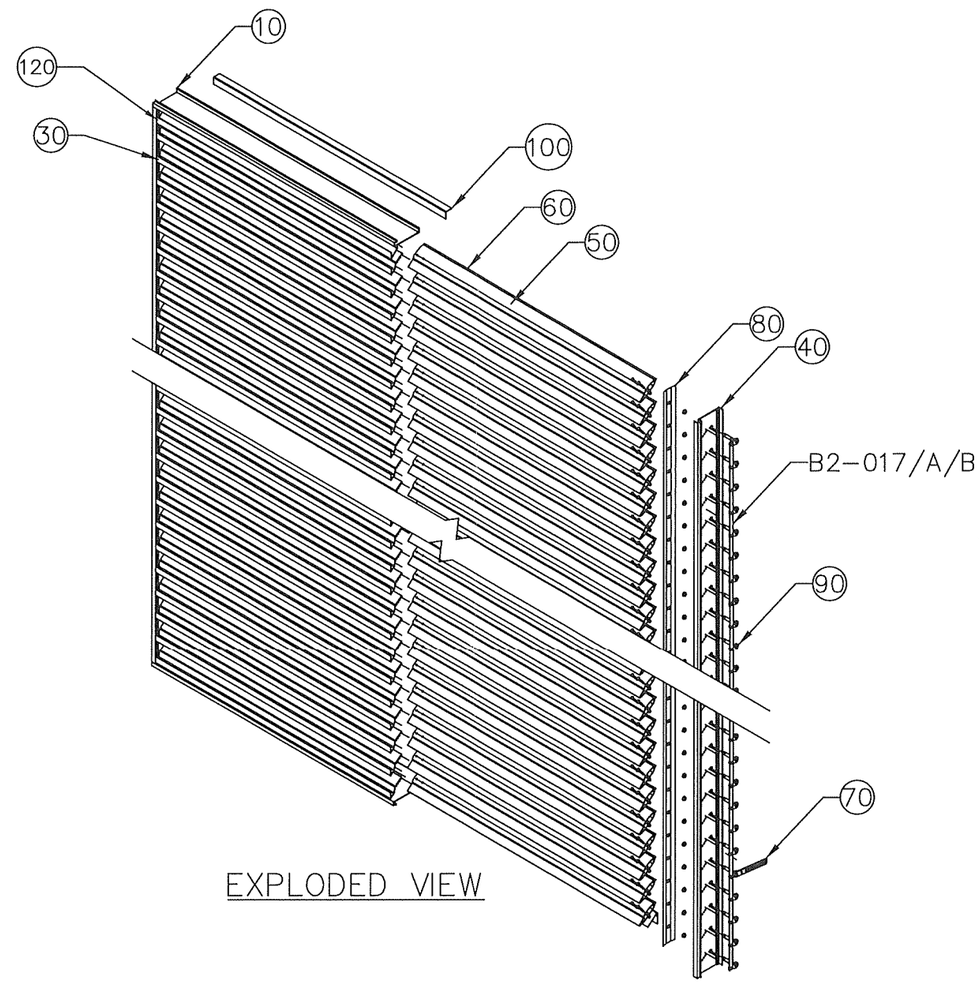

EXPLODED VIEW

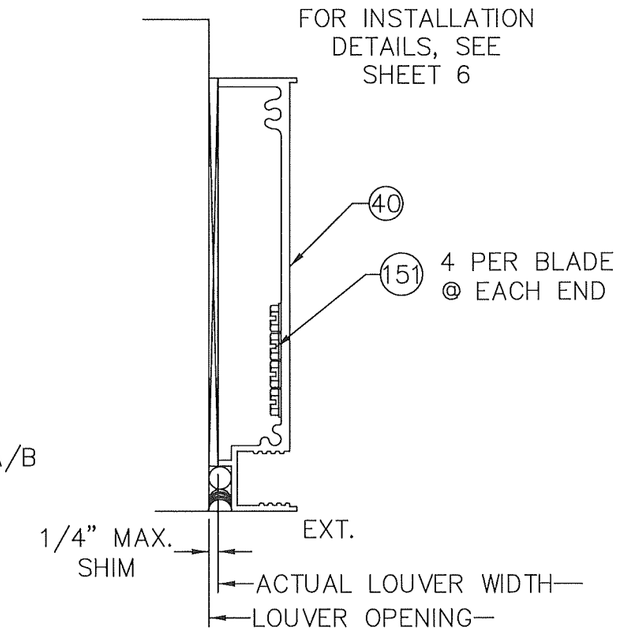

B/3 JAMB DETAIL

PRODUCT APPROVED
as complying with the Florida Building Code
NOA-No. 23-0823.04
Approval Date 11/02/2023
By
Miami-Dade Product Control

LUCAS A. TURNER
LICENSE
No. 58201
STATE OF FLORIDA
PROFESSIONAL ENGINEER

10/4/2023

LUCAS TURNER, FL PE 58201
TURNER ENGINEERING & CONSULTING, INC.
2428 OLD NATCHEZ TRACE TRL.
CAMDEN, TN, 38320
PH 941-380-1574

Nailor Industries Inc.
4714 Winfield Road
Houston, TX 77039
TEL: 281-590-1172
FAX: 281-590-3086
www.nailor.com

REV	BY	DESCRIPTION	DATE

DWN BY: fcortinas	SCALE: NTS
DATE: 5/27/2021	SHEET: 3 OF 8
SHEET DESCRIPTION: ASSEMBLY DETAILS	REV 0
DWG: 1606CM-NOA	

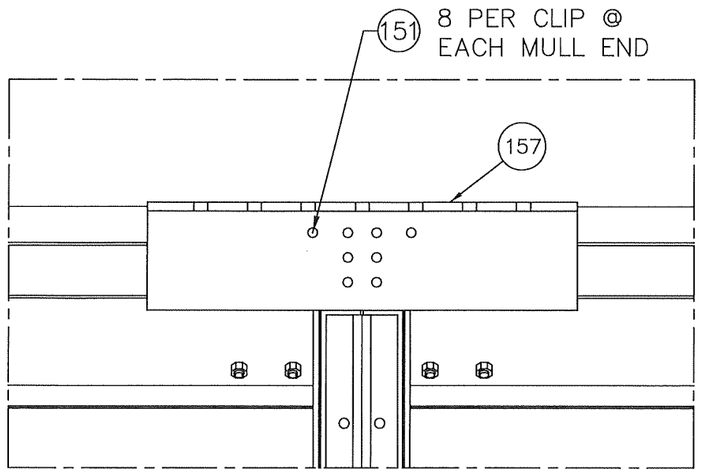

A/4 3x6x1/4" ATTACHMENT TO LOUVER WITH MULL CLIP DIRECT TO SUBSTRATE

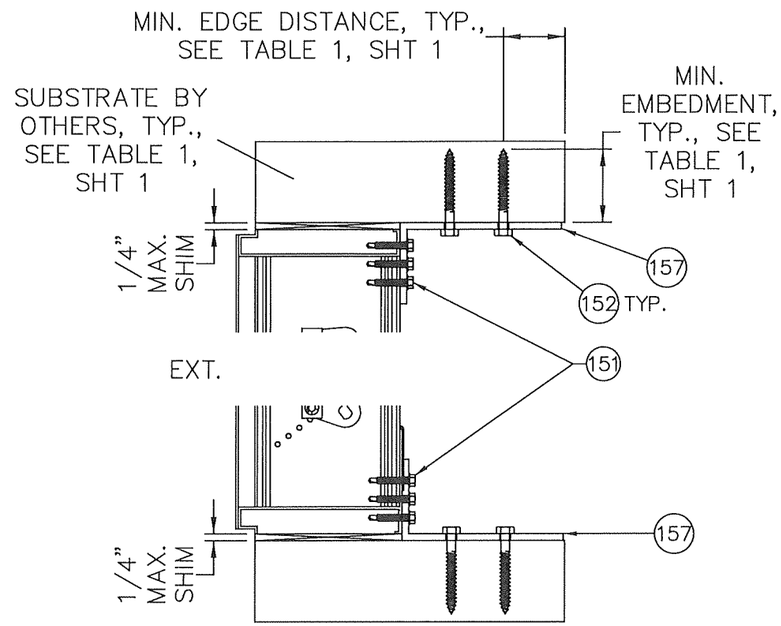

3x6x1/4" ALUMINUM MULL CLIP HEAD/SILL ATTACHMENT TO SUBSTRATE

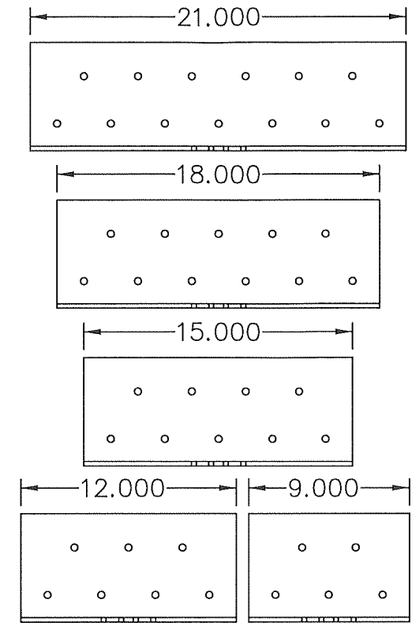

157 MULL CLIP TO SUBSTRATE

ALTERNATE SIZE LAYOUTS (FOLLOW SAME EDGE / HOLE SPACING AS 24")

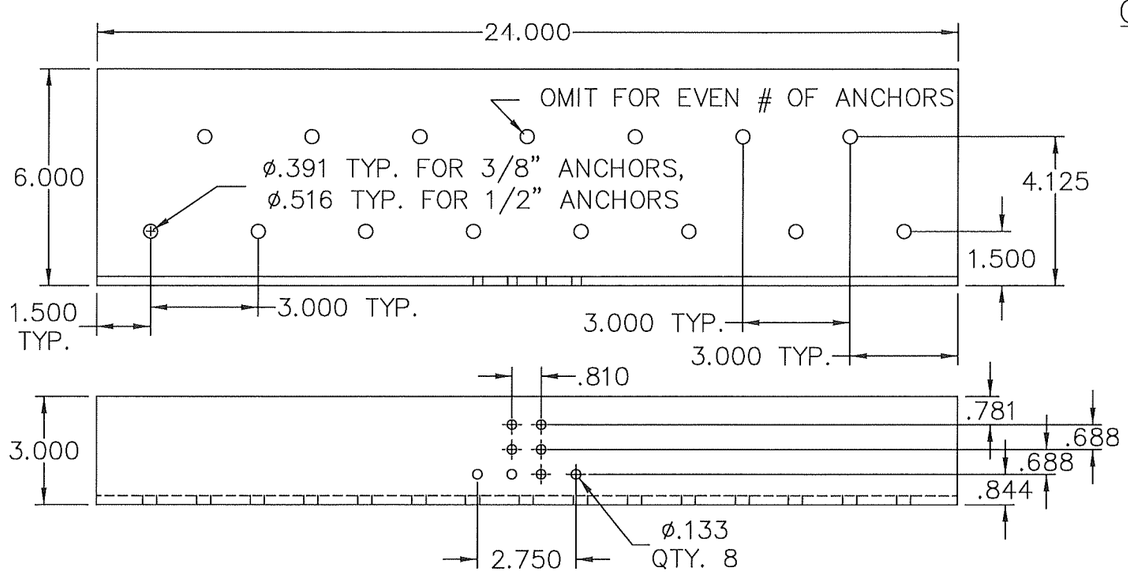

157 3x6x1/4" ALUMINUM MULL CLIP FOR ATTACHMENT TO SUBSTRATE

(9" TO 24" LENGTHS, 24" LAYOUT SHOWN ABOVE, SEE ALTERNATE MULL CLIP TO SUBSTRATE SIZE LAYOUTS THIS SHEET FOR SMALLER WIDTHS)

NOTE: THE WEIGHT OF THE LOUVER ASSEMBLY MUST BE SUPPORTED BY THE SUBSTRATE, NOT THE MULL CLIPS.

SEE TABLE 2, SHEET 1 FOR MULL CLIP LENGTH AND ANCHOR QUANTITY REQUIREMENTS BY LOUVER SIZE / DP. IF TABLE 2 REQUIRES AN EVEN NUMBER OF ANCHORS, DO NOT USE ANCHOR IN THE CENTER HOLE OF THE CLIP

PRODUCT APPROVED
as complying with the Florida Building Code
NOA-No. 23-0823.04
Approval Date 11/02/2023
By
Miami-Dade Product Control

LUCAS A. TURNER
LICENSE
No. 58201
STATE OF FLORIDA
PROFESSIONAL ENGINEER

10/4/2023
LUCAS TURNER, FL PE 58201
TURNER ENGINEERING & CONSULTING, INC.
2428 OLD NATCHEZ TRACE TRL.
CAMDEN, TN, 38320
PH 941-380-1574

Nailor Industries Inc.
4714 Winfield Road
Houston, TX 77039
TEL: 281-590-1172
FAX: 281-590-3086
www.nailor.com

REV	BY	DESCRIPTION	DATE

DWN BY: fcortinas	SCALE: NTS
DATE: 5/27/2021	SHEET: 4 OF 8
SHEET DESCRIPTION: HEAD/SILL TO SUBSTRATE	REV 0
DWG: 1606CM-NOA	

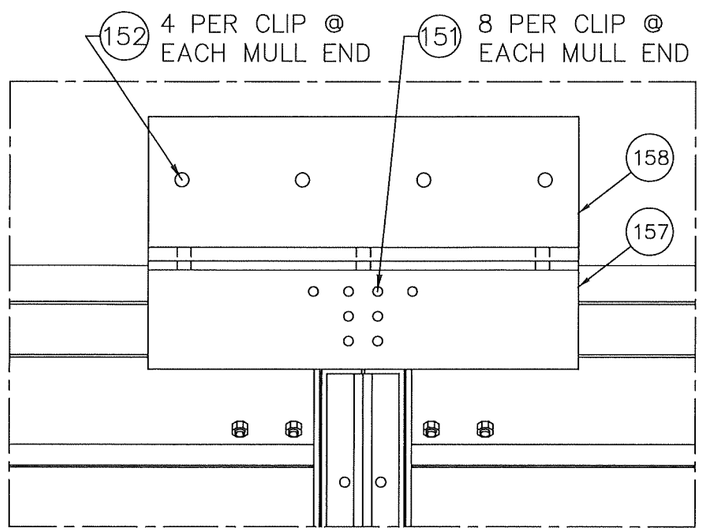

A/5 MULL ATTACHMENT WITH 3x6x1/4" MOUNTING CLIP AND 4x4x3/8" MOUNTING ANGLE

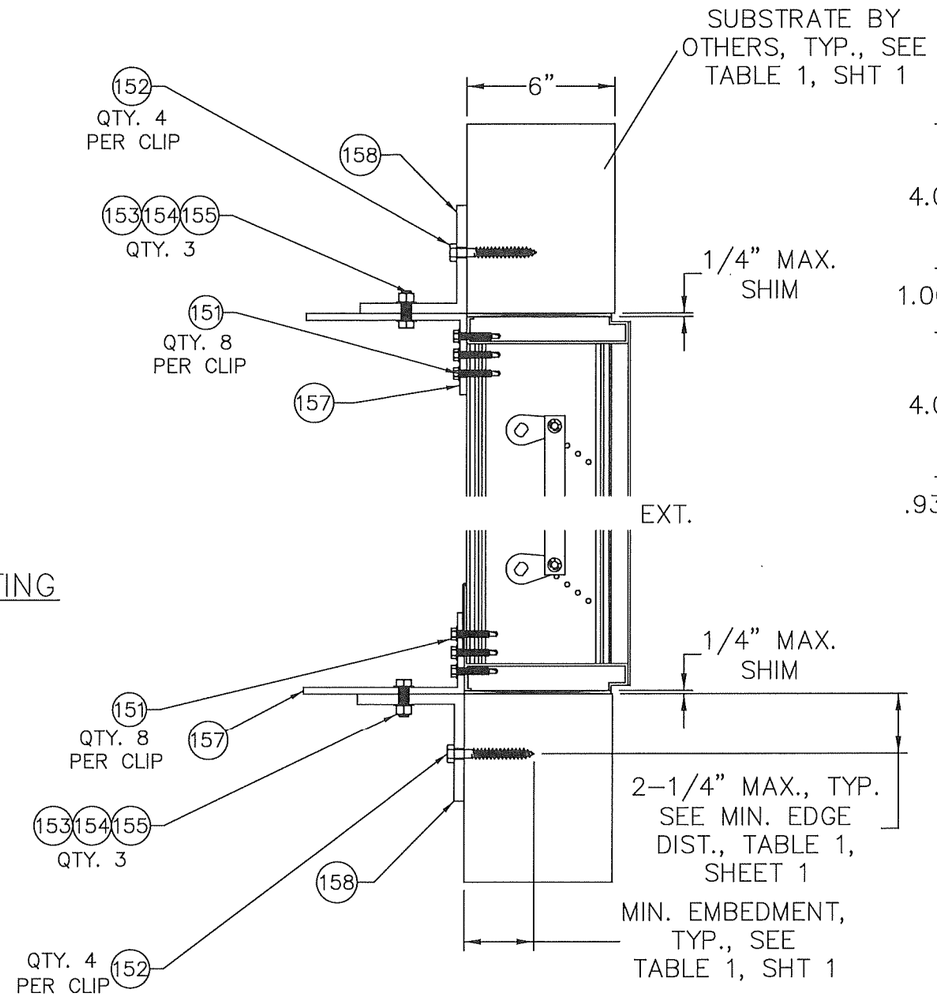

3x6x1/4" ALUMINUM MULL CLIP HEAD/SILL OPTIONAL ATTACHMENT TO 6" WALL WITH 4X4X3/8" ALUMINUM MOUNTING ANGLE

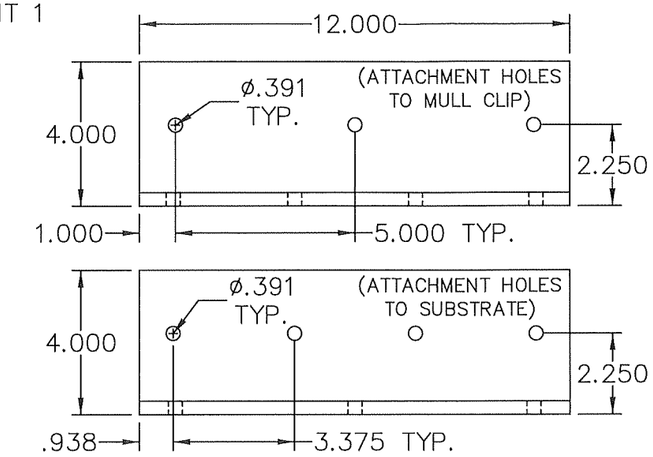

158 4x4x3/8" ALUMINUM MOUNTING ANGLE @ MULLS

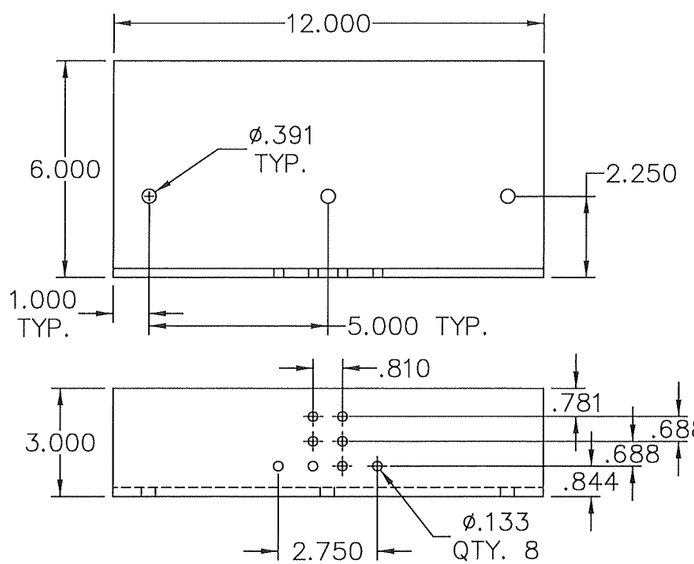

157 3x6x1/4" ALUMINUM MULL CLIP FOR ATTACHMENT TO MOUNTING ANGLE, 6" WALL

NOTE: THE WEIGHT OF THE LOUVER ASSEMBLY MUST BE SUPPORTED BY THE SUBSTRATE, NOT THE MULL CLIPS OR MOUNTING ANGLES.

PRODUCT APPROVED
as complying with the Florida Building Code
NOA-No. 23-0823.04
Approval Date 11/02/2023
By
Miami-Dade Product Control

LUCAS A. TURNER LICENSE No. 58201 STATE OF FLORIDA PROFESSIONAL ENGINEER

10/4/2023
LUCAS TURNER, FL PE 58201
TURNER ENGINEERING & CONSULTING, INC.
2428 OLD NATCHEZ TRACE TRL.
CAMDEN, TN, 38320
PH 941-380-1574

Nailor Industries Inc.
4714 Winfield Road
Houston, TX 77039
TEL: 281-590-1172
FAX: 281-590-3086
www.nailor.com

REV	BY	DESCRIPTION	DATE

DWN BY: fcortinas	SCALE: NTS
DATE: 5/27/2021	SHEET: 5 OF 8
SHEET DESCRIPTION: HEAD/SILL, 6" WALL	REV 0
DWG: 1606CM-NOA	

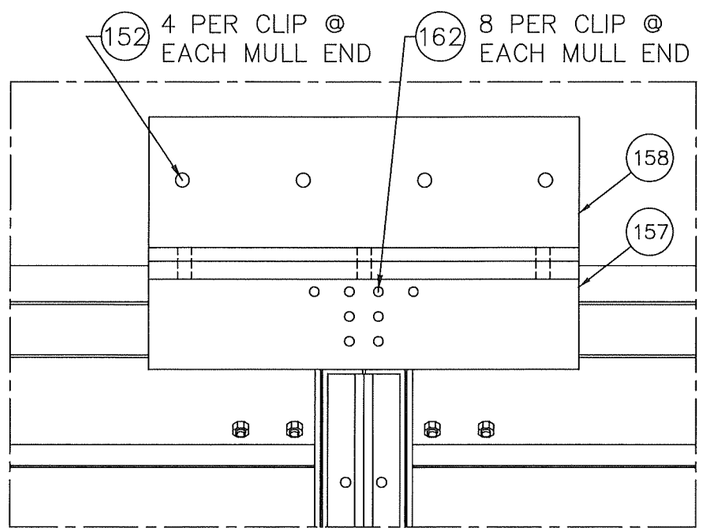

A/6 MULL ATTACHMENT WITH 3xXx1/2" STEEL MOUNTING CLIP AND 4x4x3/8" MOUNTING ANGLE

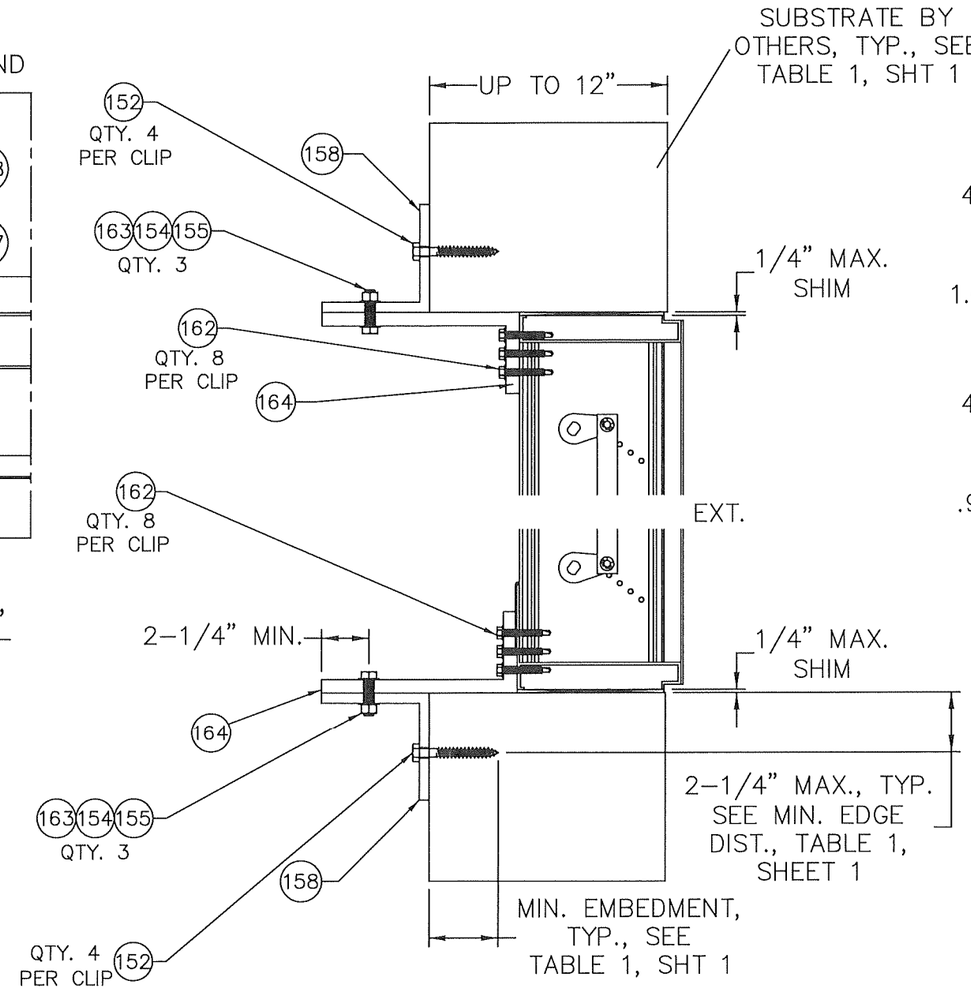

3xXx1/2" STEEL MULL CLIP HEAD/SILL OPTIONAL ATTACHMENT TO UP TO 12" WALL WITH 4x4x3/8" ALUMINUM MOUNTING ANGLE

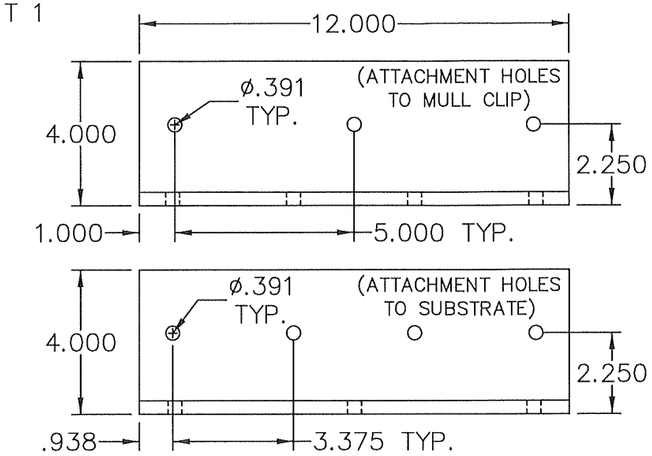

158 4x4x3/8" ALUMINUM MOUNTING ANGLE @ MULLS

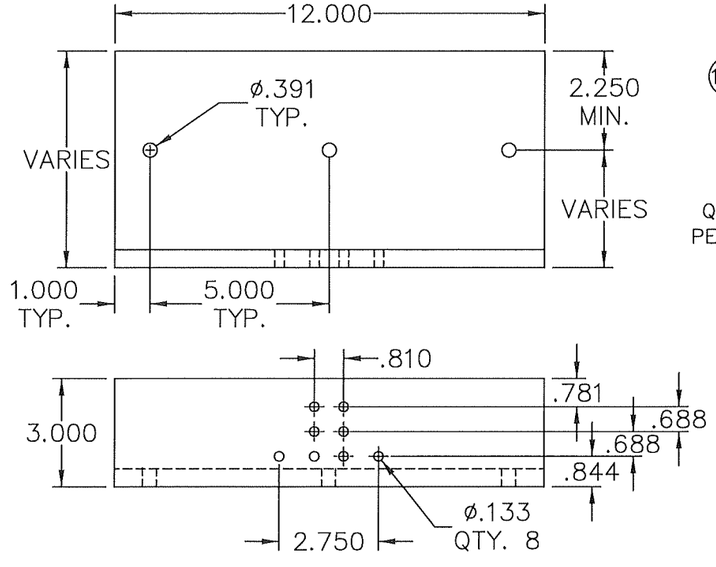

164 3xXx1/2" STEEL MULL CLIP FOR ATTACHMENT TO MOUNTING ANGLE

NOTE: THE WEIGHT OF THE LOUVER ASSEMBLY MUST BE SUPPORTED BY THE SUBSTRATE, NOT THE MULL CLIPS OR MOUNTING ANGLES.

PRODUCT APPROVED
as complying with the Florida Building Code
NOA-No. 23-0823.04
Approval Date 11/02/2023
By
Miami-Dade Product Control

LUCAS A. TURNER LICENSE No. 58201 STATE OF FLORIDA PROFESSIONAL ENGINEER

10/4/2023
LUCAS TURNER, FL PE 58201
TURNER ENGINEERING & CONSULTING, INC.
2428 OLD NATCHEZ TRACE TRL.
CAMDEN, TN, 38320
PH 941-380-1574

Nailor Industries Inc.
4714 Winfield Road
Houston, TX 77039
TEL: 281-590-1172
FAX: 281-590-3086
www.nailor.com

REV	BY	DESCRIPTION	DATE

DWN BY: fcortinas	SCALE: NTS
DATE: 5/27/2021	SHEET: 6 OF 8
SHEET DESCRIPTION: HEAD/SILL ANCHORAGE	REV 0
DWG: 1606CM-NOA	

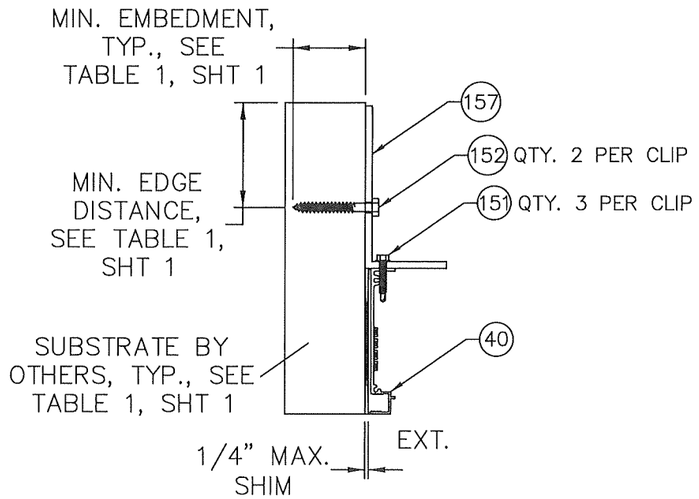

A/7 3x6x1/4" ALUM. JAMB CLIP ATTACHMENT TO SUBSTRATE

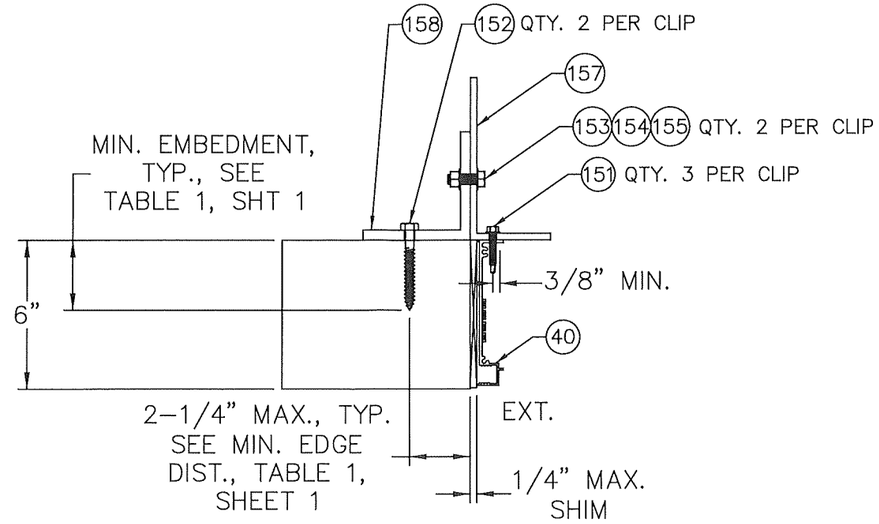

B/7 3x6x1/4" ALUM. JAMB CLIP OPTIONAL ATTACHMENT TO 6" WALL WITH MOUNTING ANGLE

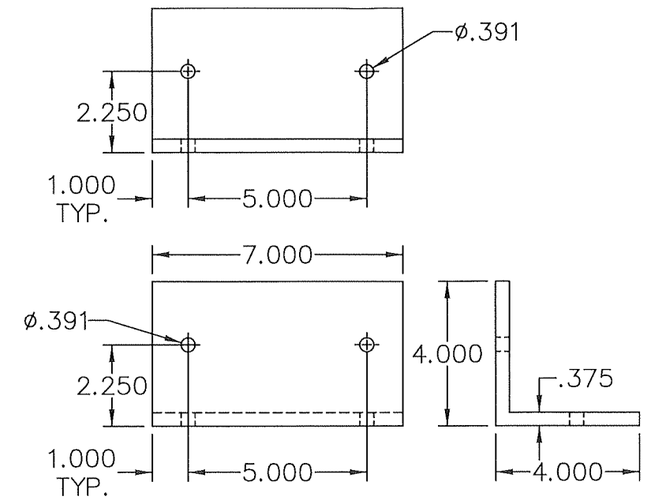

158 4x4x3/8" ALUM. MOUNTING ANGLE @ JAMBS

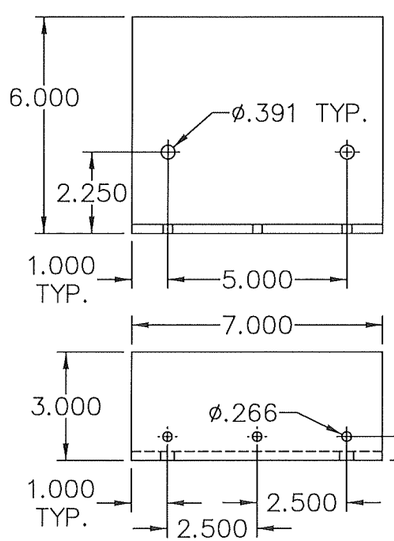

157 3x6x1/4" ALUMINUM

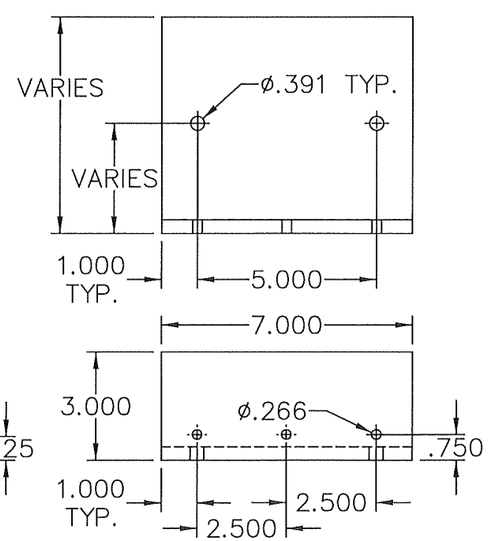

165 3xXx3/8" ALUMINUM

JAMB CLIPS FOR ATTACHMENT DIRECTLY TO SUBSTRATE OR TO MOUNTING ANGLE

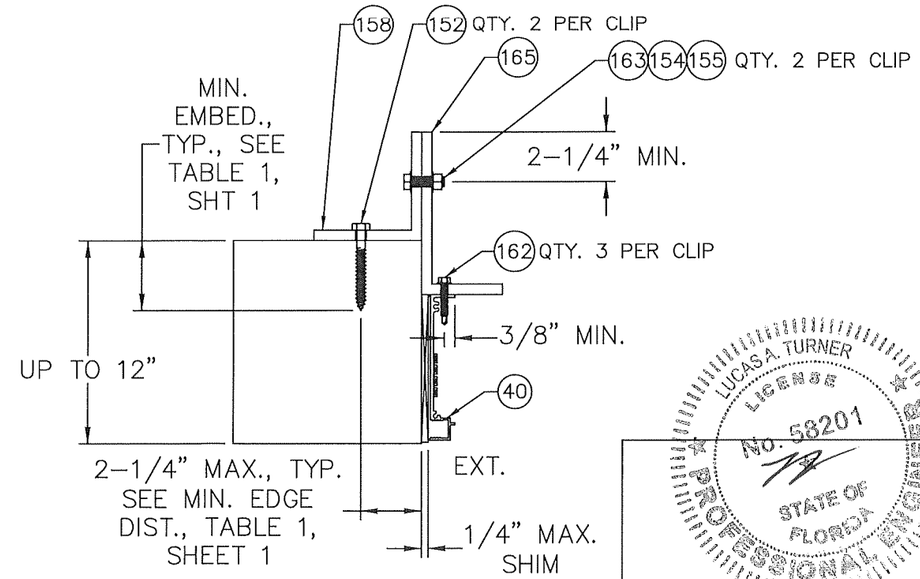

C/7 3xXx3/8" ALUMINUM JAMB CLIP OPTIONAL ATTACHMENT TO UP TO 12" WALL WITH MOUNTING ANGLE

PRODUCT APPROVED
as complying with the Florida Building Code
NOA-No. 23-0823.04
Approval Date 11/02/2023
By
Miami-Dade Product Control

LUCAS A. TURNER
LICENSE
No. 58201
STATE OF FLORIDA
PROFESSIONAL ENGINEER

10/4/2023
LUCAS TURNER, FL PE 58201
TURNER ENGINEERING & CONSULTING, INC.
2428 OLD NATCHEZ TRACE TRL.
CAMDEN, TN, 38320
PH 941-380-1574

Nailor Industries Inc.
4714 Winfield Road
Houston, TX 77039
TEL: 281-590-1172
FAX: 281-590-3086
www.nailor.com

REV	BY	DESCRIPTION	DATE

DWN BY: fcortinas	SCALE: NTS	
DATE: 5/27/2021	SHEET: 7 OF 8	
SHEET DESCRIPTION: JAMB ANCHORAGE		REV 0
DWG: 1606CM-NOA		

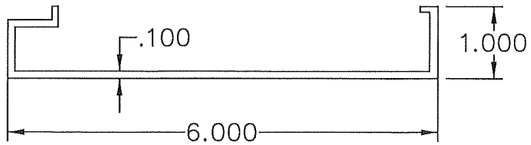

(10) C6–139 HEAD

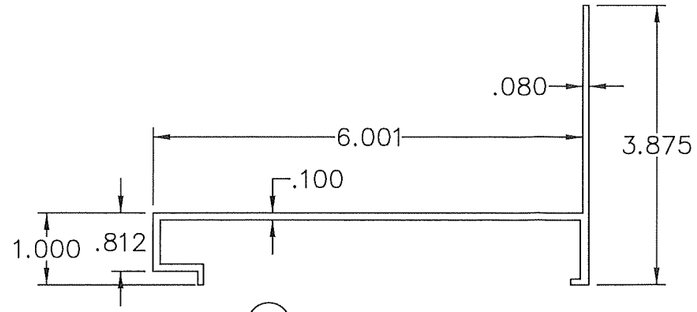

(20) C6–140 SILL

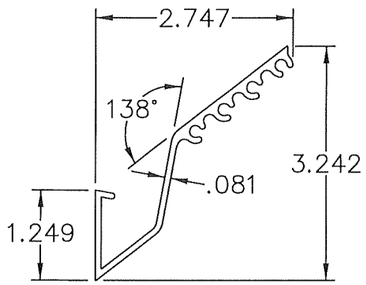

(30) C6–218 FRONT BLADE

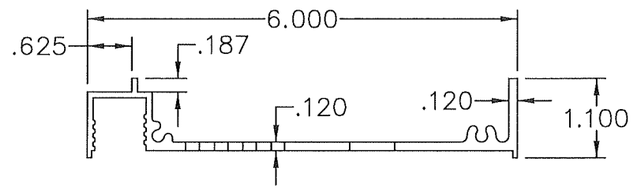

(40) C6–141 JAMB

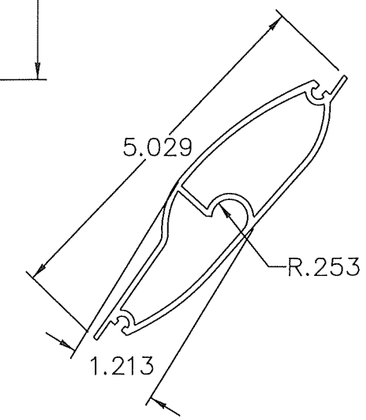

(50) STD BLADE

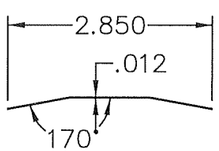

(80) B2–042 JAMB SEAL SS

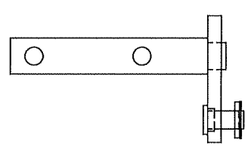

(90) B2–018 LINKAGE PEN/CAM

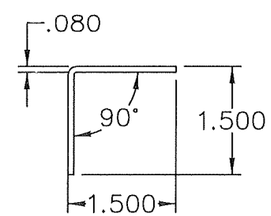

(100) BLADE STOP

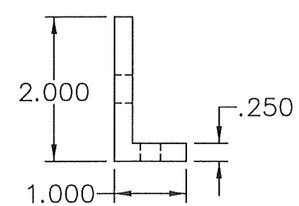

(159) MULL ANGLE

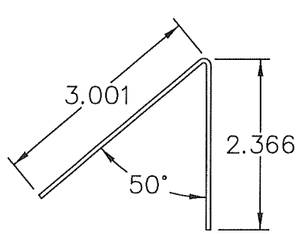

(110) WATER STOP

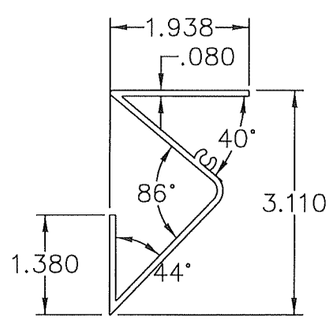

(120) DRAINABLE HEAD

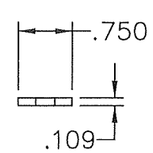

(130)(140)(150) LINKAGE BAR

ITEM	PART NUMBER	DESCRIPTION
10	C6-139	HEAD, 6063-T6
20	C6-140	SILL, 6063-T6
30	C6-218	FRONT BLADE, 6063-T6
40	C6-141	JAMB, 6063-T6
50	C6-217	STD BLADE, 6063-T6
60	B2-634	BLADE SEAL
70	TPL10-22	DRIVE ARM, 6063-T6
80	B2-042	JAMB SEAL SS, 6063-T6
90	B2-018	LINKAGE PEN/CAM, 6063-T6
100	FORMED	BLADE STOP, 6063-T6
110	FORMED	WATER STOP, 6063-T6
120	C6-168	DRAINABLE HEAD, 6063-T6
130	B2-017	LINKAGE BAR 6 HOLE
140	B2-017A	LINKAGE BAR 8 HOLE
150	B2-017B	LINKAGE BAR 9 HOLE
151	C6-193	#14 X 1-1/2, 401 SS HEX SCREW
152	-	INSTALLATION FASTENER, SEE TABLE 1, SHT 1
153	B7-053	3/8 -16 X 1 SS BOLT
154	B2-537	3/8-16 SS NUT
155	B2-594	3/8 SS FLAT WASHER
156	C6-160	2 X 2 ANGLE, 6063-T6
157	-	3 X 6 X 1/4" ANGLE CLIP, 6063-T6
158	-	4 X 4 X 3/8" MOUNTING ANGLE CLIP, 6063-T6
159	-	2 X 1 X 1/4" MULL ANGLE, 6063-T6
160	-	1/4 -20 X 1-1/2 SS BOLT
161	-	1/4-20 SS NUT
162	-	#14 X 1-3/4, 401 SS HEX SCREW
163	-	3/8 -16 X 1-1/4 SS BOLT
164	-	3 x VARIES x 1/2" ANGLE CLIP, ASTM A 36
165	-	3 x VARIES x 3/8" ANGLE CLIP, 6063-T6

PRODUCT APPROVED
as complying with the Florida Building Code
NOA-No. 23-0823.04
Approval Date 11/02/2023
By
Miami-Dade Product Control

LUCAS A. TURNER
LICENSE
No. 58201
STATE OF FLORIDA
PROFESSIONAL ENGINEER

10/4/2023
LUCAS TURNER, FL PE 58201
TURNER ENGINEERING & CONSULTING, INC.
2428 OLD NATCHEZ TRACE TRL.
CAMDEN, TN, 38320
PH 941-380-1574

Nailor Industries Inc.
4714 Winfield Road
Houston, TX 77039
TEL: 281–590–1172
FAX: 281–590–3086
www.nailor.com

REV	BY	DESCRIPTION	DATE

DWN BY: fcortinas	SCALE: NTS
DATE: 5/27/2021	SHEET: 8 OF 8
SHEET DESCRIPTION: BOM, PROFILES	REV 0
DWG: 1606CM–NOA	