MIAMI-DADE COUNTY
PRODUCT CONTROL SECTION
11805 SW 26 Street, Room 208
Miami, Florida 33175-2474
T (786) 315-2590 F (786) 315-2599
www.miamidade.gov/building

DEPARTMENT OF REGULATORY AND ECONOMIC RESOURCES (RER)
BOARD AND CODE ADMINISTRATION DIVISION

NOTICE OF ACCEPTANCE (NOA)

Nailor Industries Inc.
4714 Winfield Road
Houston, TX 77039

SCOPE: This NOA is being issued under the applicable rules and regulations governing the use of construction materials. The documentation submitted has been reviewed and accepted by Miami-Dade County RER-Product Control Section to be used in Miami Dade County and other areas where allowed by the Authority Having Jurisdiction (AHJ).

This NOA shall not be valid after the expiration date stated below. The Miami-Dade County Product Control Section (In Miami Dade County) and/or the AHJ (in areas other than Miami Dade County) reserve the right to have this product or material tested for quality assurance purposes. If this product or material fails to perform in the accepted manner, the manufacturer will incur the expense of such testing and the AHJ may immediately revoke, modify, or suspend the use of such product or material within their jurisdiction. RER reserves the right to revoke this acceptance if it is determined by Miami-Dade County Product Control Section that this product or material fails to meet the requirements of the applicable building code.

This product is approved as described herein and has been designed to comply with the Florida Building Code, including the High Velocity Hurricane Zone.

DESCRIPTION: Model 1606DHPM Aluminum Louver w/ and w/o Damper – L.M.I.

APPROVAL DOCUMENT: Drawing No. **1606DHPM**, titled "1606DHPM Louver w/ and w/o Damper", sheets 1 through 27 of 27, prepared by manufacturer, dated 11/29/2021, with revision B dated 08/14/2024, signed and sealed by Wayne K. Helmila, P.E., bearing the Miami-Dade County Product Control revision stamp with the Notice of Acceptance number and expiration date by the Miami-Dade County Product Control Section.

MISSILE IMPACT RATING: Large and Small Missile Impact Resistant

LABELING: Each unit shall bear a permanent label with the manufacturer's name or logo, Houston, TX, model/series, and following statement: "Miami-Dade County Product Control Approved", unless otherwise noted herein.

LIMITATION: This system is to be installed in a location where the room behind the louver is designed to drain water penetrating into the room, and the room will house water resistant/waterproof equipment, components, or supplies.

RENEWAL of this NOA shall be considered after a renewal application has been filed and there has been no change in the applicable building code negatively affecting the performance of this product.

TERMINATION of this NOA will occur after the expiration date or if there has been a revision or change in the materials, use, and/or manufacture of the product or process. Misuse of this NOA as an endorsement of any product, for sales, advertising or any other purposes shall automatically terminate this NOA. Failure to comply with any section of this NOA shall be cause for termination and removal of NOA.

ADVERTISEMENT: The NOA number preceded by the words Miami-Dade County, Florida, and followed by the expiration date may be displayed in advertising literature. If any portion of the NOA is displayed, then it shall be done in its entirety.

INSPECTION: A copy of this entire NOA shall be provided to the user by the manufacturer or its distributors and shall be available for inspection at the job site at the request of the Building Official.

This NOA **revises NOA No. 23-0724.23** and consists of this page 1 and evidence pages E-1 and E-2, as well as approval document mentioned above.

The submitted documentation was reviewed by **Carlos M. Utrera, P.E.**

MIAMI-DADE COUNTY APPROVED

08/15/24

NOA No. 24-0516.04
Expiration Date: August 30, 2028
Approval Date: August 15, 2024

Nailor Industries Inc.

NOTICE OF ACCEPTANCE: EVIDENCE SUBMITTED

1. EVIDENCE SUBMITTED UNDER PREVIOUS NOA's

A. DRAWINGS ***"Submitted under NOA No. 18-0117.12"***

1. Drawing No. **1606DHPM**, titled "1606DHPM Louver w/ and w/o Damper", sheets 1 through 21 of 21, dated 06/14/17, prepared by the manufacturer, signed and sealed by Wayne K. Helmila, P.E.

B. TESTS ***"Submitted under NOA No. 18-0117.12"***

1. Test reports on: 1) Uniform Static Air Pressure Test, Loading per FBC, TAS 202-94
2) Large Missile Impact Test per FBC, TAS 201-94
3) Cyclic Wind Pressure Loading per FBC, TAS 203-94
along with installation diagram of Model 1606 DHPM Louver System, prepared by Intertek, Test Report No. **H1900.01-801-18-R2**, dated 09/21/17 and revised on 05/23/18, signed and sealed by Tyler Westerling, P.E.

2. Test Report on Wind Driven Rain Resistance per TAS 100(A)-95 on a Model 1606 DHPM Aluminum Louver with damper, prepared by Intertek, Test Report No. **H0222.04-801-18,** dated 09/27/17, signed and sealed by Tyler Westerling, P.E.

3. Test Report on High Velocity Wind Driven Rain Resistance per ANSI/AMCA 550-09 on a Model 1606 DHPM Aluminum Louver, prepared by Intertek, Test Report No. **H0222.03-801-18,** dated 09/28/17, signed and sealed by Tyler Westerling, P.E.

C. CALCULATIONS ***"Submitted under NOA No. 18-0117.12"***

1. Louver structural calculations dated 11/03/17, prepared by Rice Engineering, signed and sealed by Wayne K. Helmila, P.E.

D. QUALITY ASSURANCE

1. Miami-Dade Department of Regulatory and Economic Resources (RER).

E. MATERIAL CERTIFICATIONS

1. None.

F. STATEMENTS

1. Statement letter of code conformance to the **FBC 6th Edition (2017)** issued by Rice Engineering, dated 04/16/18, signed and sealed by Wayne K. Helmila, P.E.

2. Statement letter of no financial interest issued by Rice Engineering, dated 04/16/18, signed and sealed by Wayne K. Helmila, P.E.

Carlos M. Utrera, P.E.
Product Control Examiner
NOA No. 24-0516.04
Expiration Date: August 30, 2028
Approval Date: August 15, 2024

NOTICE OF ACCEPTANCE: EVIDENCE SUBMITTED

2. EVIDENCE SUBMITTED UNDER NOA # 21-0630.10 AND NEW

A. DRAWINGS

1. Drawing No. **1606DHPM**, titled "1606DHPM Louver w/ and w/o Damper", sheets 1 through 27 of 27, prepared by manufacturer, dated 11/29/2021, with revision B dated 08/142024, prepared by the manufacturer, signed and sealed by Wayne K. Helmila, P.E.

B. TESTS

1. None.

C. CALCULATIONS

1. Louver calculations, prepared by Rice Engineering, dated 08/14/2024, signed and sealed by Wayne K. Helmila, P.E.

D. QUALITY ASSURANCE

1. Miami-Dade Department of Regulatory and Economic Resources (RER).

E. MATERIAL CERTIFICATIONS

1. None.

F. STATEMENTS

1. Statement letter of code conformance to the 8th edition (2023) of the FBC, issued by Rice Engineering, dated 07/22/2024, signed and sealed by Wayne K. Helmila, P.E.

2. Statement letter of no financial interest issued by Rice Engineering, dated 07/22/2024, signed and sealed by Wayne K. Helmila, P.E.

"Submitted under NOA # 21-0630.10"

3. Statement letter of code conformance to the **7th edition (2020) FBC**, issued by Rice Engineering, dated 08/16/2021, signed and sealed by Wayne K. Helmila, P.E.

Carlos M. Utrera, P.E.
Product Control Examiner
NOA No. 24-0516.04
Expiration Date: August 30, 2028
Approval Date: August 15, 2024

DRAWING INDEX:

1. INDEX TO DRAWINGS AND NOTES.
2. 1606DHPM LOUVER- FLANGE FRAME SLEEVE MOUINT
3. 1606DHPM LOUVER- CONTINUOUS ANGLE MOUNT
4. 1606DHPM / DAMPER- FLANGE FRAME SLEEVE MOUNT
5. 1606DHPM / DAMPER- CONTINUOUS ANGLE MOUNT
6. 1606DHPM LOUVER- FLANGE FRAME SLEEVE MOUNT HEAD & SILL DETAIL
7. 1606DHPM LOUVER- MULLION ANGLE MOUNT HEAD & SILL DETAIL.
8. 1606DHPM LOUVER- BLADE SUPPORT DETAIL.
9. 1606DHPM LOUVER- FLANGE FRAME SLEEVE MOUNT JAMB AND SUPPORT DETAIL
10. 1606DHPM LOUVER- CONTINUOUS ANGLE MOUNT JAMB AND SUPPORT DETAIL.
11. 1606DHPM LOUVER- FLANGE FRAME SLEEVE MOUNT MULLION DETAIIL.
12. 1606DHPM LOUVER- CONTINUOUS ANGLE MOUNT MULLION DETAIL.
13. 1606DHPM LOUVER / DAMPER FLANGE FRAME W/ SLEEVE & MULLION ANGLE MOUNT HEAD & SILL DETAIL.
14. 1606DHPM / DAMPER- FLANGE FRAME SLEEVE MOUNT CMU SUBSTRATE HEAD & SILL DETAIL
15. 1606DHPM / DAMPER- FLANGE FRAME SLEEVE MOUNT JAMB AND MULLION DETAIL
16. 1606DHPM LOUVER / DAMPER FLANGE FRAME SLEEVE MOUNT 9 X 3 X 1/4 & 11 X 3 X 1/4 ANGLE MULLION DETAIL
17. 1606DHPM LOUVER / DAMPER CONTINUOUS ANGLE MOUNT JAMB AND MULLION DETAIL.
18. 1606DHPM LOUVER / DAMPER COUNTINUOUS ANGLE MOUNT 9 X 3 X 1/4 & 11 X 3 X 1/4 ANGLE MULLION DETAIL
19. 1606DHPM LOUVER W/ AND W/O DAMPER- SLEEVE / CONTINUOUS MOUNT PART PROFILES.
20. 1606DHPM LOUVER W/ AND W/O DAMPER- SLEEVE / CONTINUOUS MOUNT PART PROFILES CONT.
21. 16" MULLION ANGLES BACK OF THE WALL MOUNT
22. 20" MULLION ANGLES BACK OF THE WALL MOUNT.
23. 30" CMU MULLION ANGLES BACK OF THE WALL MOUNT.
24. 1606DHPM LOUVER W/ AND W/O DAMPER AVAILBLE SHAPES
25. 1606DHPM LOUVER W/ AND W/O DAMPER- SLEEVE / CONTINUOUS MOUNT BILL OF MATERIAL.
26. 1606DHPM LOUVER W/ AND W/O DAMPER FASTENER TABLES
27. 1606DHPM LOUVERW/ AND W/O DAMPER GENERAL NOTES.

NOTES:

1) THE 1606DHPM HAS BEEN TESTED IN ACCORDANCE WITH THE MIAMI-DADE COUNTY PROTOCOLS TAS - 100 (A),TAS-201, 202, & 203 FOR LARGE MISSILE IMPACT, UNIFORM PRESSURE AND CYCLIC WIND PRESSURE.

2) THIS LOUVER SYSTEM IS APPROVED FOR APPLICATIONS WITH DESIGN PRESSURES OF +/- 150 PSF OR LESS

3) THIS LOUVER SYSTEM IS NON-BEARING AND IS NOT DESIGNED TO WITHSTAND BUILDING DEAD LOADS.

4) LOUVER ANCHORS ARE REVIEWED FOR ATTACHMENT INTO STEEL, CONCRETE, MASONRY, OR TIMBER SUBSTRUCTURE. MIMIMUM EDGE DISTANCE AND EMBEDMENT REQUIREMENTS ARE SHOWN. NAILOR IND. DOES NOT DETERMINE THE STURCTURE INTEGRITY OF THE SUBSTRUCTURE.

5) MAXIMMUM SINGLE SECTION SIZE : 72" WIDE X 120" HIGH.

6) MAXIMUM ASSEMBLED LOUVER SIZE UNLIMITED WIDE X 120" HIGH. MAX. MULLION SPACING IS 72".

7) SECTIONS OR ASSEMBLIES MAY BE STACKED VERTICALLY PROVIDING A SUITABLE STRUCTURAL SUPPORT IS DESIGNED AND INSTALLED BY OTHERS TO SUPPORT ALL LOADS TRANSFERRED FROM THE LOUVER.

TESTS PREFORMED:
TAS-100 (A) WIND DRIVEN RAIN RESISTANCE
TAS-201 LARGE MISSILE IMPACT
TAS-202 UNIFORM STATIC AIR PRESSURE TEST
TAS-203 CYCLIC WIND PRESUSRE TEST
DESIGN PRESSURE RATING 150 PSF

PRODUCT REVISED
as complying with the Florida Building Code
NOA-No. 24-0516.04
Expiration Date 08/30/2028
By
Miami-Dade Product Control

REVISIONS:
REV B: UPDATED DRAWING INDEX
REV B : PG 20,21,22,23,2425,26,27

DWN BY: fcortinas
CHK BY: BDennis
DATE: 11/29/2021
SCALE: NTS
SHEET: 1 OF 27
REV B
DWG. NO. 1606DHPM

Nailor Industries Inc.
4714 Winfield Road Houston, TX 77039
www.nailor.com TEL: 281-590-1172 FAX: 281-590-3086

TITLE: 1606DHPM LOUVER W/ AND W/O DAMPER INDEX

WAYNE K. HELMILA
LICENSE
No. 59092
STATE OF FLORIDA
PROFESSIONAL ENGINEER

07/23/2024
COA: 9090

RICE
ENGINEERING
105 School Creek Trail
Luxemburg, WI 54217
Phone: (920) 617-1042
Fax: (920) 617-1100
www.rice-inc.com

Florida Firm No: F-01000005061
Certificate of Authorization: #9090
Wayne K. Helmila
Registration No: 59092

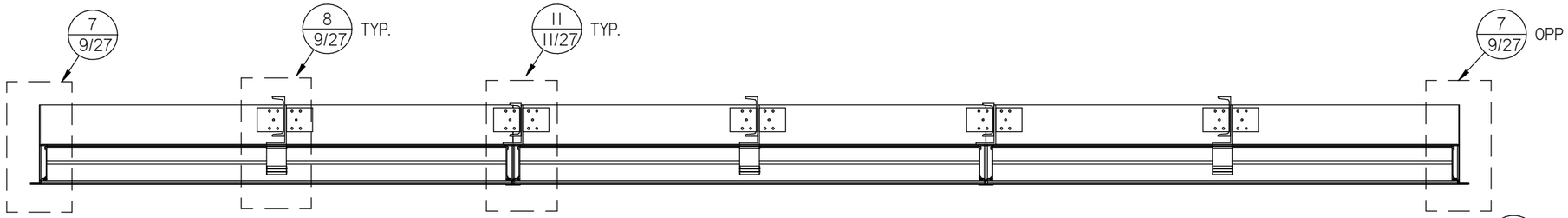

HORIZONTAL CROSS SECTION

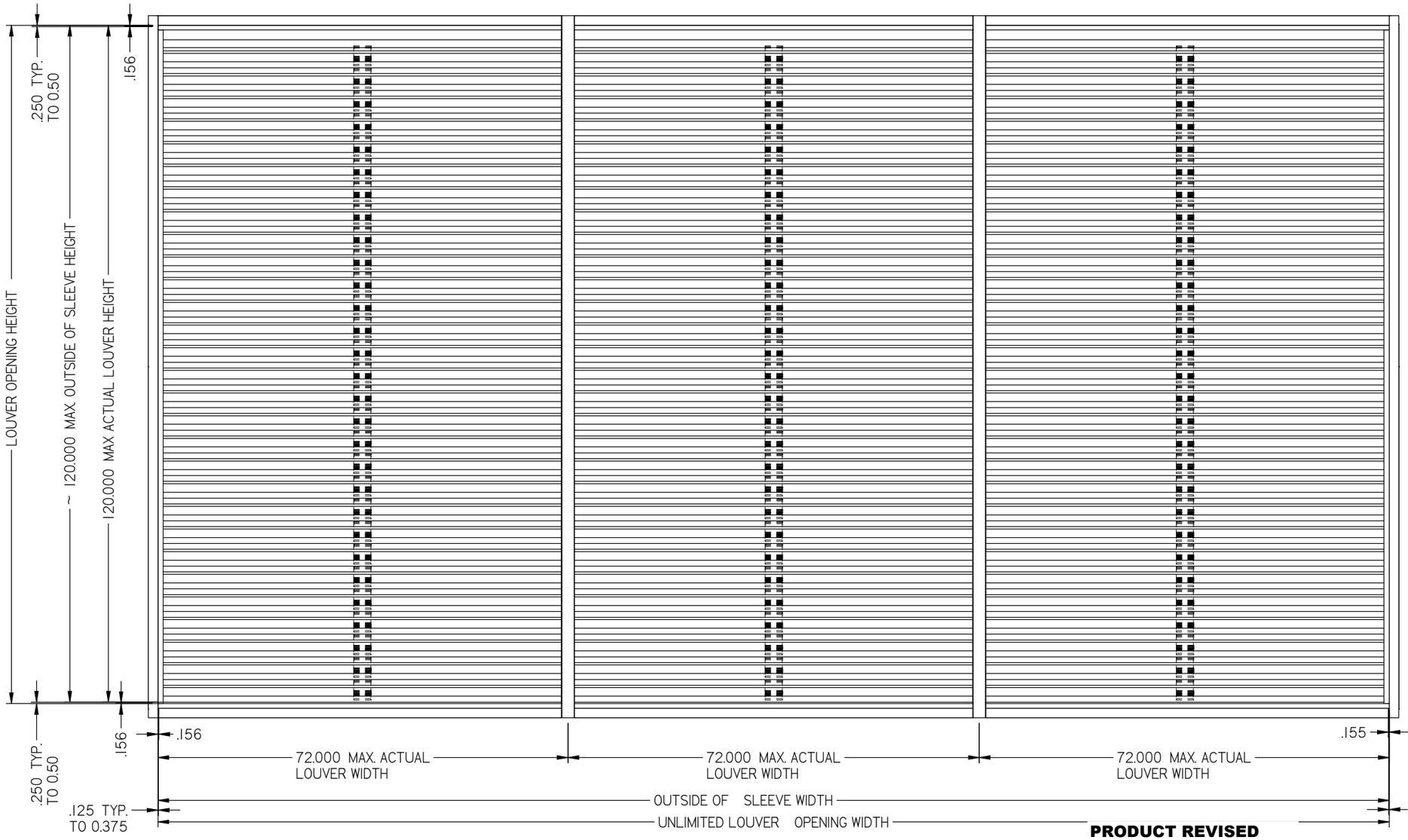

ELEVATION

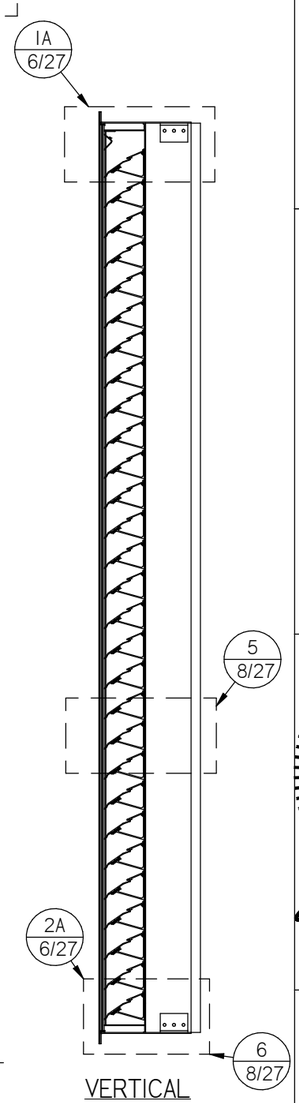

VERTICAL CROSS SECTION

PRODUCT REVISED
as complying with the Florida Building Code
NOA-No. 24-0516.04
Expiration Date 08/30/2028
By
Miami-Dade Product Control

DWN BY: fcortinas
CHK BY: BDennis
DATE: 11/29/2021
SCALE: NTS
SHEET: 2 OF 27
REV B
DWG. NO. 1606DHPM

Nailor Industries Inc.
4714 Winfield Road Houston, TX 77039
www.nailor.com TEL: 281-590-1172 FAX: 281-590-3086

TITLE: 1606DHPM LOUVER FLANGE FRAME SLEEVE MOUNT

WAYNE K. HELMILA
LICENSE
No. 59092
STATE OF FLORIDA
PROFESSIONAL ENGINEER

07/23/2024
COA: 9090

RICE
ENGINEERING
105 School Creek Trail
Luxemburg, WI 54217
Phone: (920) 617-1042
Fax: (920) 617-1100
www.rice-inc.com

Florida Firm No: F-01000005061
Certificate of Authorization: #9090
Wayne K. Helmila
Registration No: 59092

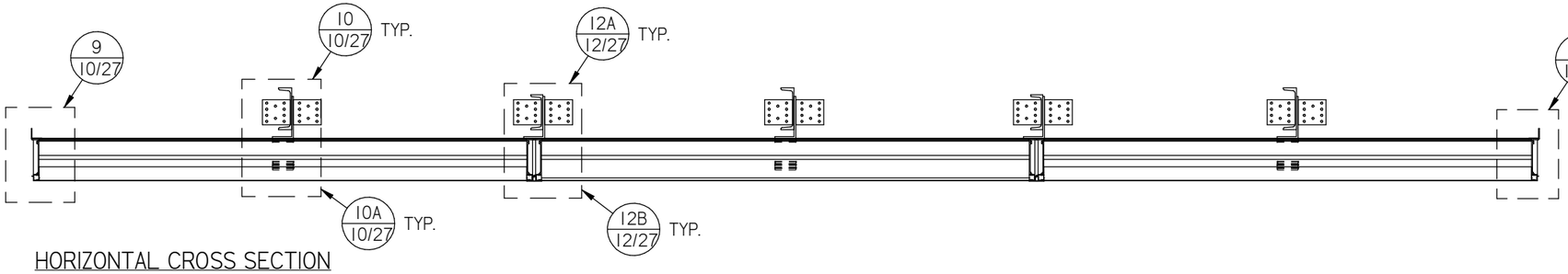

HORIZONTAL CROSS SECTION

PRODUCT REVISED
as complying with the Florida Building Code
NOA-No. 24-0516.04
Expiration Date 08/30/2028
By
Miami-Dade Product Control

ELEVATION

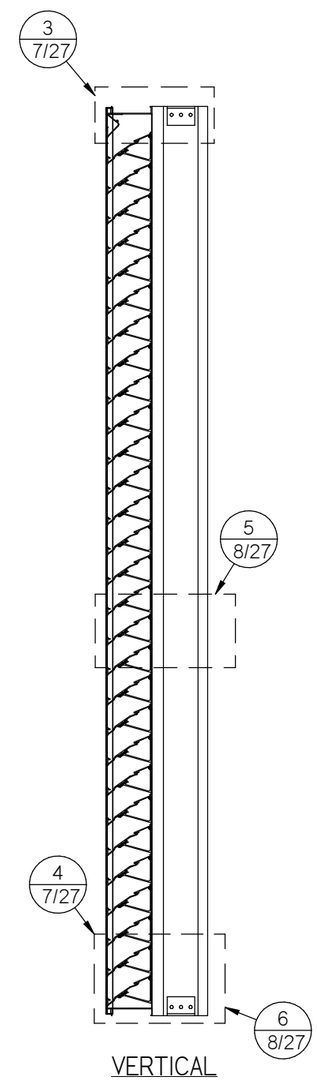

VERTICAL
CROSS SECTION

DWN BY: fcortinas
CHK BY: BDennis
DATE: 11/29/2021
SCALE: NTS
SHEET: 3 OF 27
REV B
DWG. NO. 1606DHPM

Nailor Industries Inc.
4714 Winfield Road Houston, TX 77039
TEL: 281-590-1172 FAX: 281-590-3086
www.nailor.com

TITLE: 1606DHPM LOUVER
COUNTINOUS ANGLE MOUNT

WAYNE K. HELMILA
LICENSE
No. 59092
STATE OF
FLORIDA
PROFESSIONAL ENGINEER

07/23/2024
COA: 9090

RICE
ENGINEERING
105 School Creek Trail
Luxemburg, WI 54217
Phone: (920) 617-1042
Fax: (920) 617-1100
www.rice-inc.com

Florida Firm No: F-01000005061
Certificate of Authorization: #9090
Wayne K. Helmila
Registration No: 59092

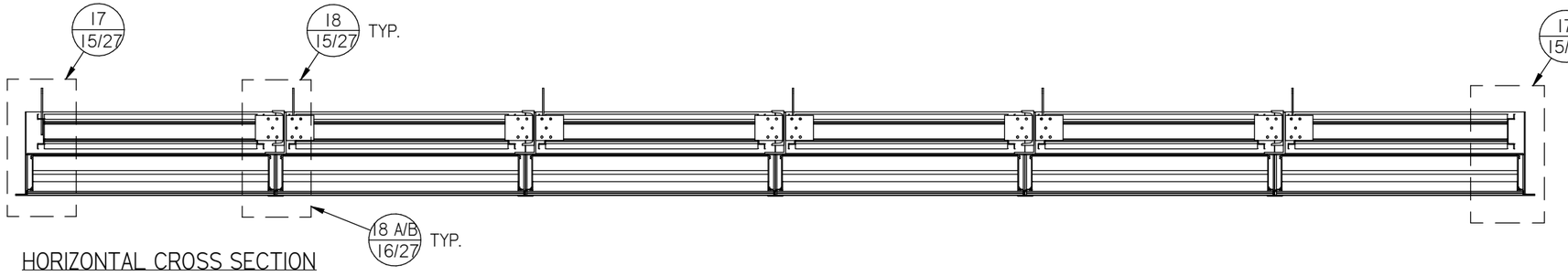

HORIZONTAL CROSS SECTION

PRODUCT REVISED
as complying with the Florida Building Code
NOA-No. 24-0516.04
Expiration Date 08/30/2028
By
Miami-Dade Product Control

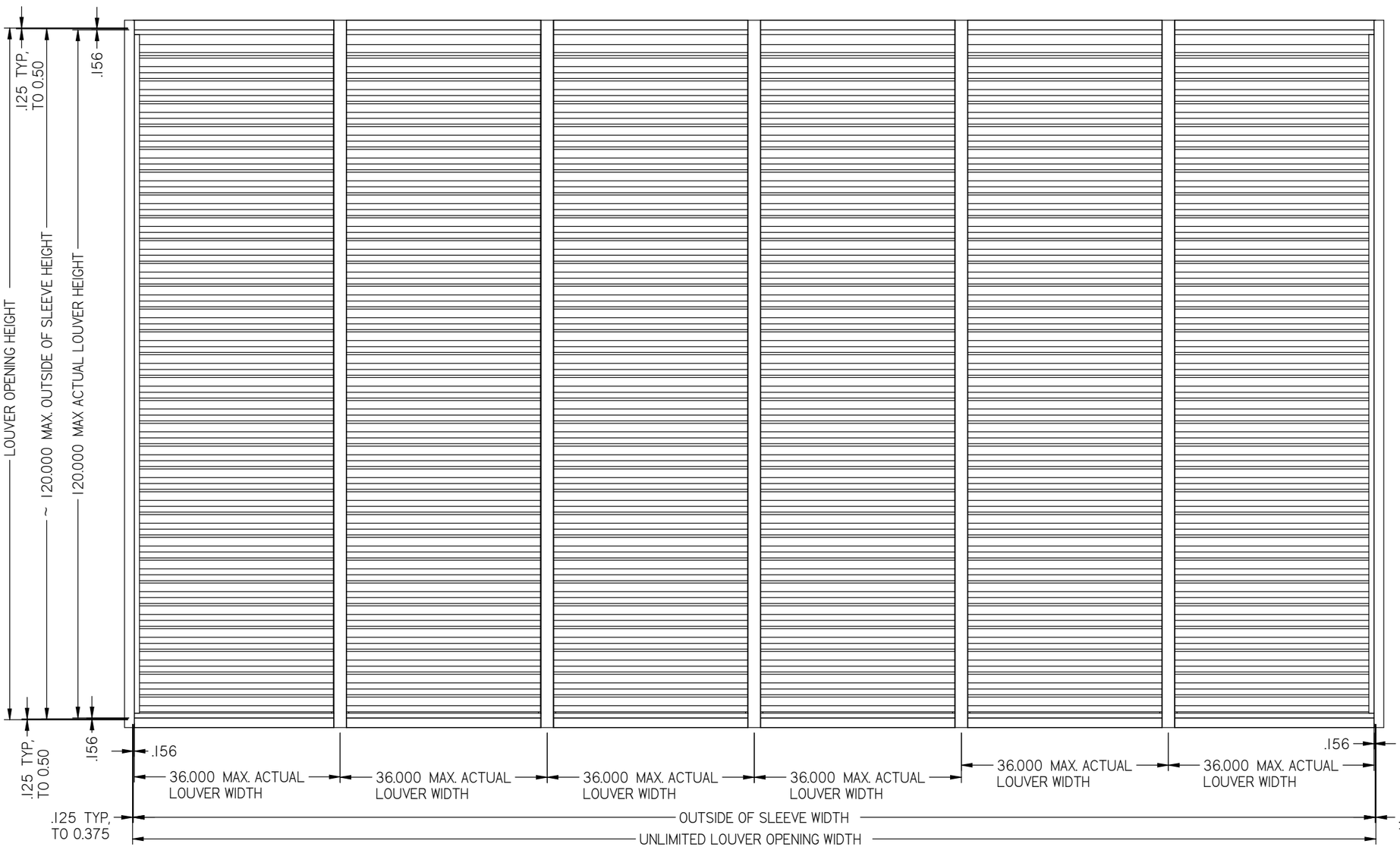

ELEVATION

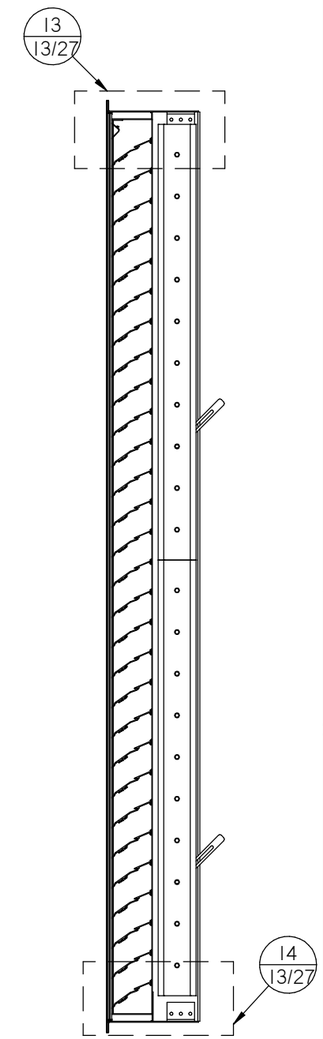

VERTICAL CROSS SECTION

DWN BY: fcortinas
CHK BY: BDennis
DATE: 11/29/2021
SCALE: NTS
SHEET: 4 OF 27
REV B
DWG. NO. 1606DHPM

Nailor Industries Inc.
4714 Winfield Road Houston, TX 77039
TEL: 281-590-1172 FAX: 281-590-3086
www.nailor.com

TITLE: 1606DHPM / DAMPER FLANGE FRAME SLEEVE MOUNT

WAYNE K. HELMILA
LICENSE
No. 59092
STATE OF FLORIDA
PROFESSIONAL ENGINEER

07/23/2024
COA: 9090

RICE
ENGINEERING
105 School Creek Trail
Luxemburg, WI 54217
Phone: (920) 617-1042
Fax: (920) 617-1100
www.rice-inc.com

Florida Firm No: F-01000005061
Certificate of Authorization: #9090
Wayne K. Helmila
Registration No: 59092

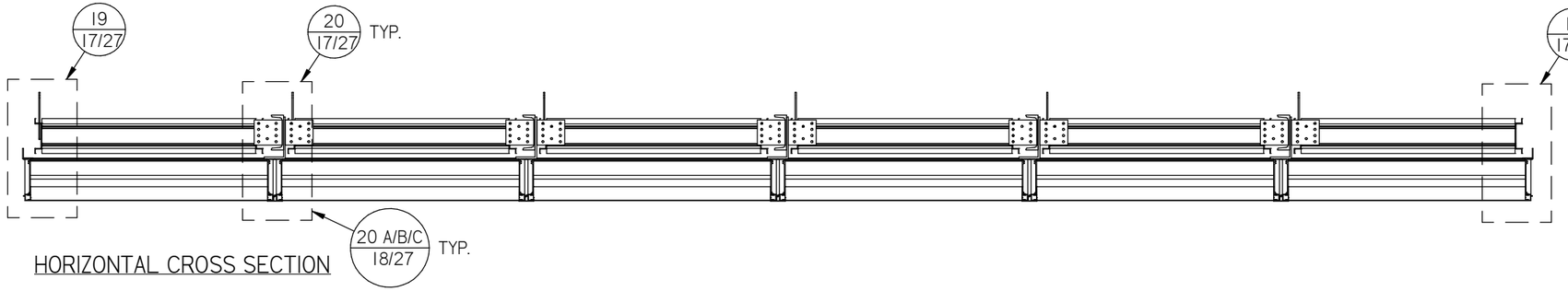

HORIZONTAL CROSS SECTION

PRODUCT REVISED
as complying with the Florida Building Code
NOA-No. 24-0516.04
Expiration Date 08/30/2028
By
Miami-Dade Product Control

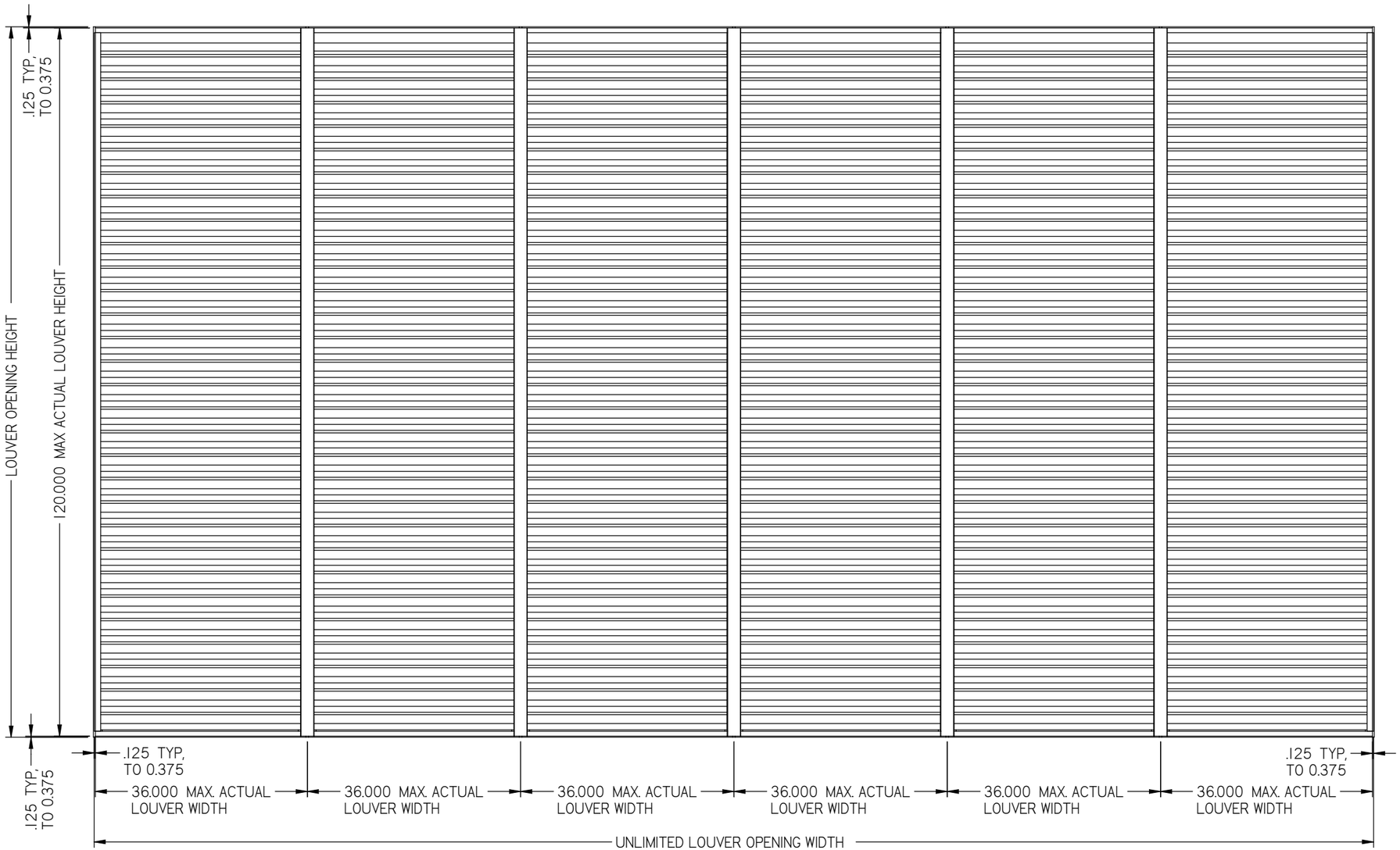

ELEVATION

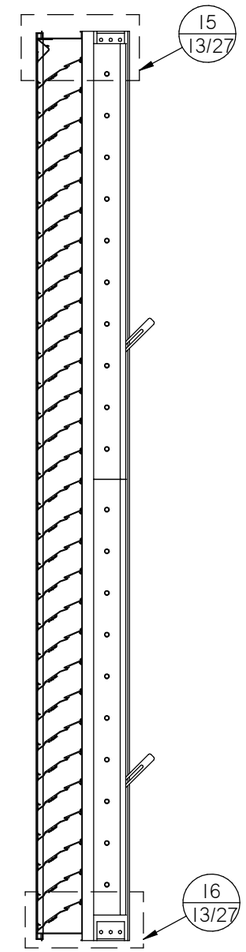

VERTICAL
CROSS SECTION

DWN BY: fcortinas
CHK BY: BDennis
DATE: 11/29/2021
SCALE: NTS
SHEET: 5 OF 27
REV B
DWG. NO. 1606DHPM

Nailor Industries Inc.
4714 Winfield Road Houston, TX 77039
www.nailor.com TEL: 281-590-1172 FAX: 281-590-3086

TITLE: 1606DHPM / DAMPER
CONTINOUS ANGLE MOUNT

WAYNE K. HELMILA
LICENSE
No. 59092
STATE OF FLORIDA
PROFESSIONAL ENGINEER

07/23/2024
COA: 9090

RICE
ENGINEERING
105 School Creek Trail
Luxemburg, WI 54217
Phone: (920) 617-1042
Fax: (920) 617-1100
www.rice-inc.com

Florida Firm No: F-01000005061
Certificate of Authorization: #9090
Wayne K. Helmila
Registration No: 59092

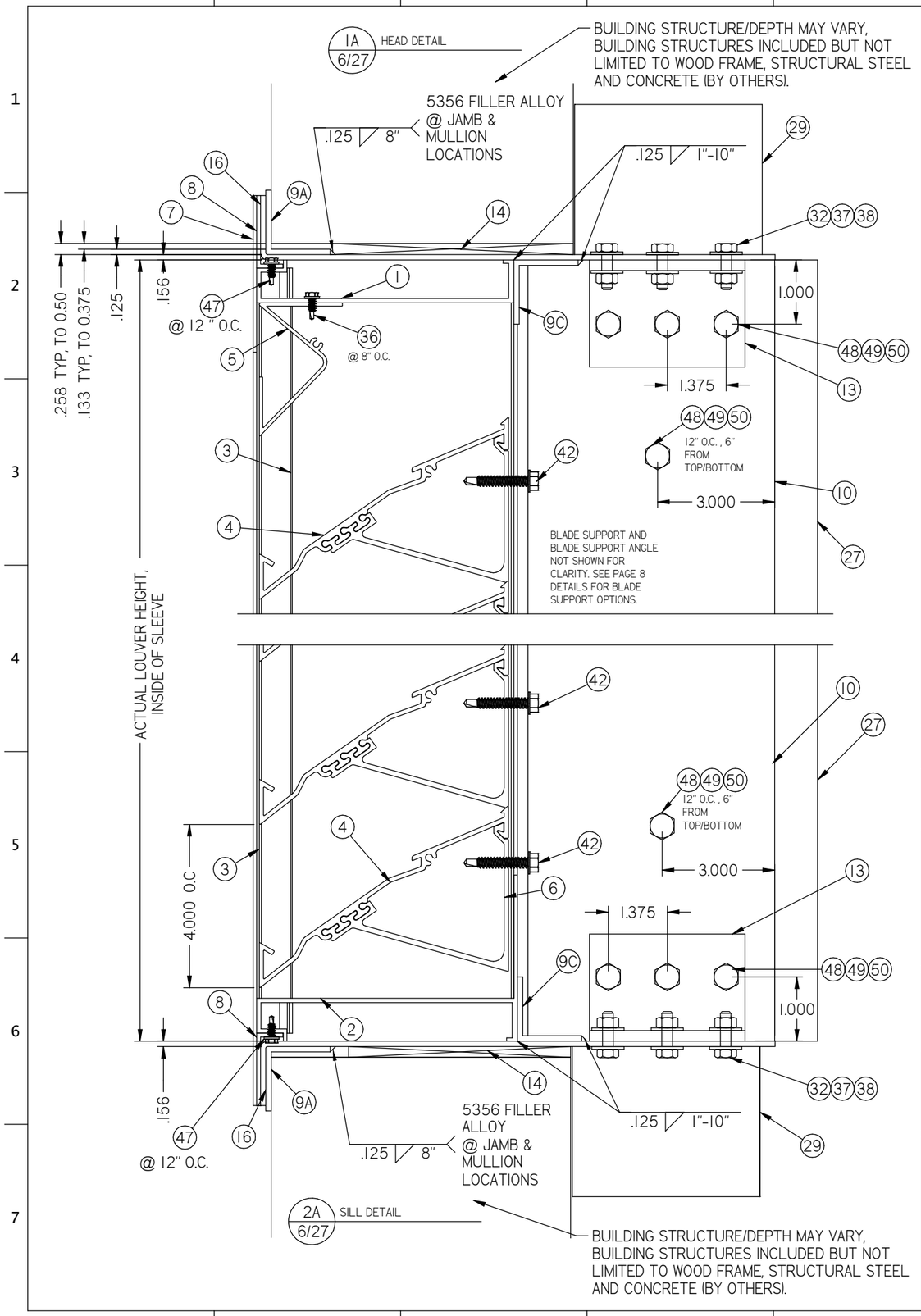

PRODUCT REVISED
as complying with the Florida Building Code
NOA-No. 24-0516.04
Expiration Date 08/30/2028
By
Miami-Dade Product Control

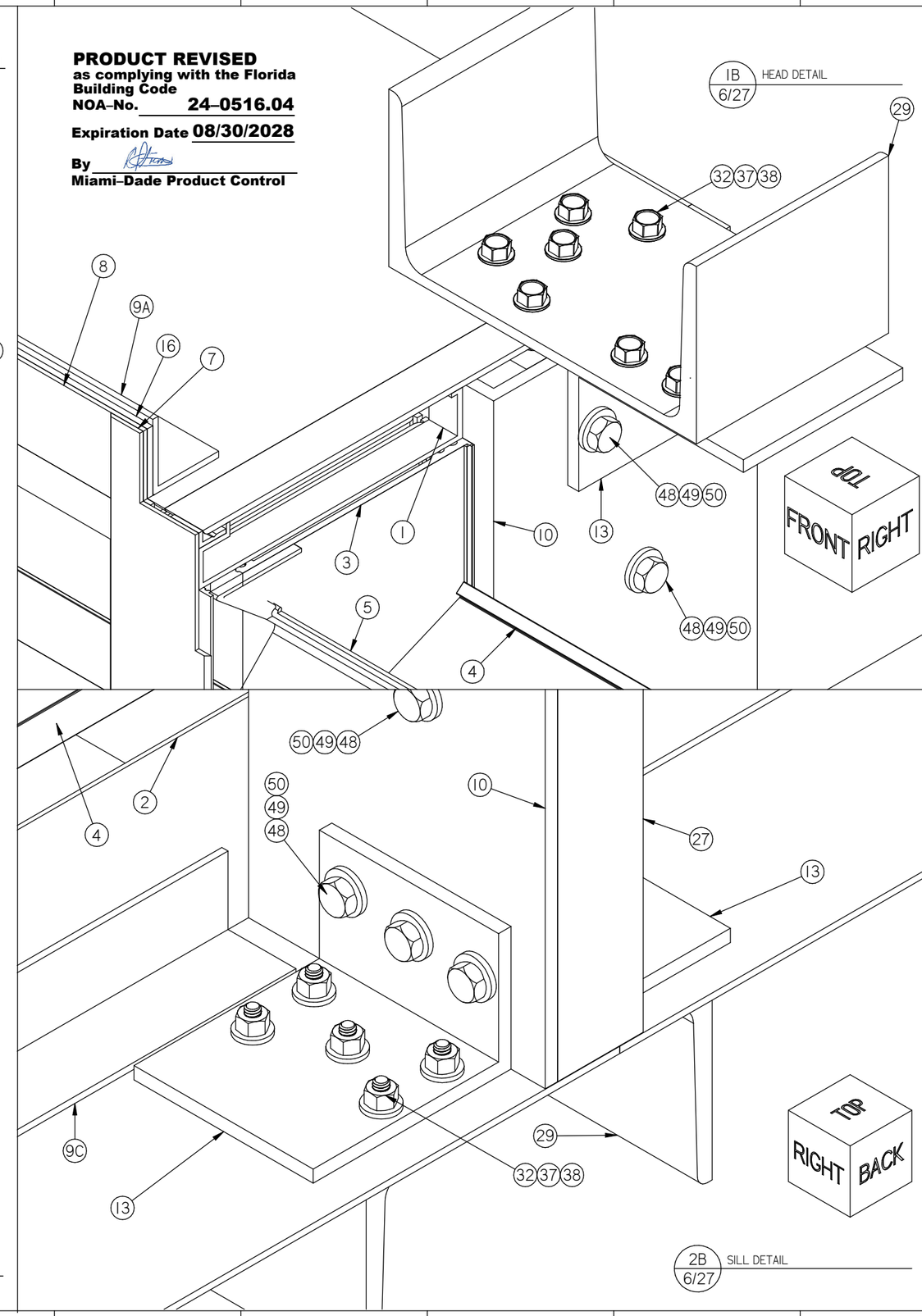

DWN BY: fcortinas
CHK BY: BDennis
DATE: 11/29/2021
SCALE: NTS
SHEET: 6 OF 27
REV B
DWG. NO. 1606DHPM

Nailor Industries Inc.
4714 Winfield Road Houston, TX 77039
TEL: 281-590-1172 FAX: 281-590-3086
www.nailor.com

TITLE: 1606DHPM LOUVER FLANGE FRAME SLEEVE MOUNT HEAD & SILL DETAIL

WAYNE K. HELMILA
LICENSE
No. 59092
STATE OF FLORIDA
PROFESSIONAL ENGINEER

07/23/2024
COA: 9090

RICE
ENGINEERING
105 School Creek Trail
Luxemburg, WI 54217
Phone: (920) 617-1042
Fax: (920) 617-1100
www.rice-inc.com

Florida Firm No: F-01000005061
Certificate of Authorization: #9090
Wayne K. Helmila
Registration No: 59092

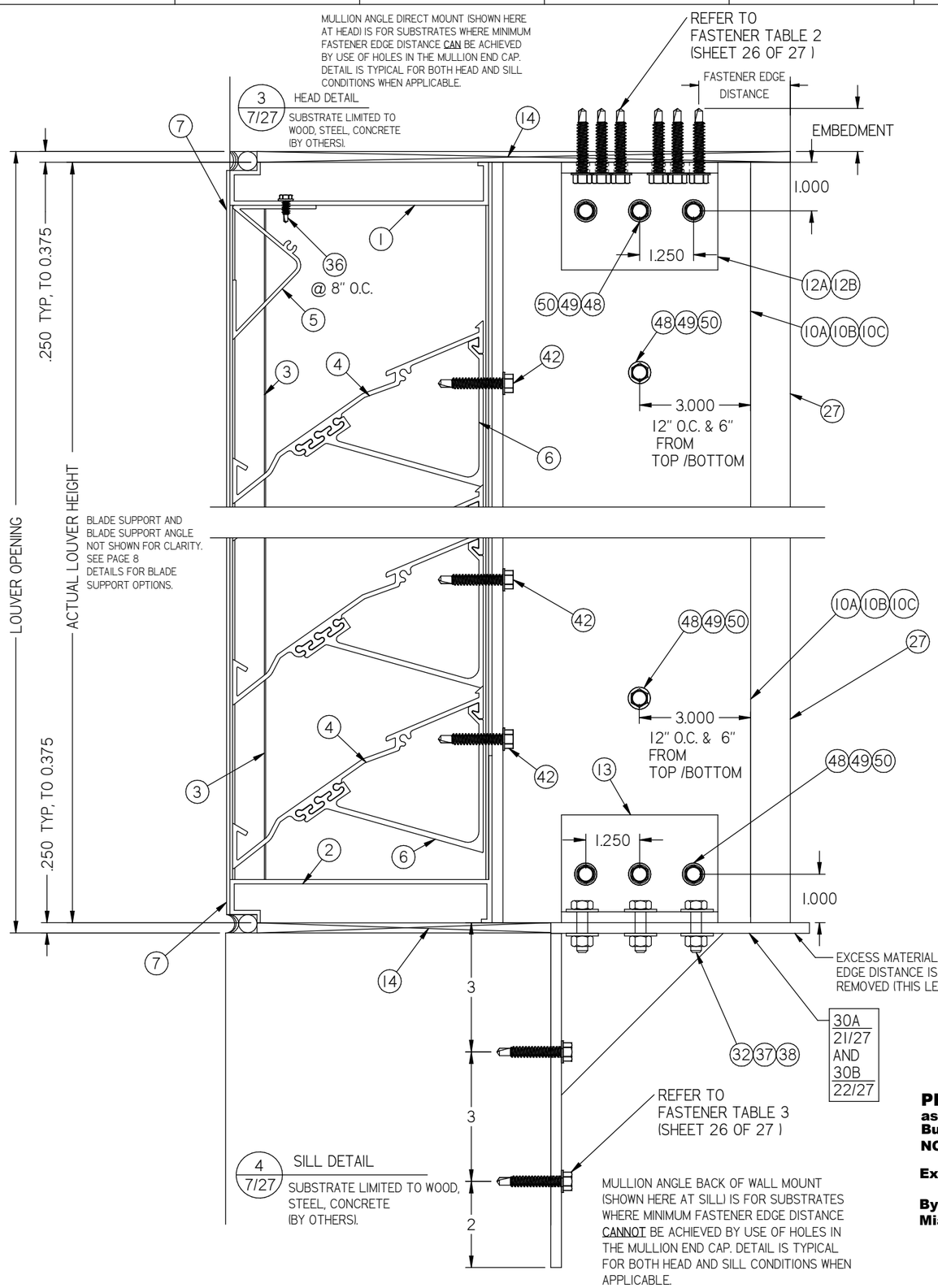

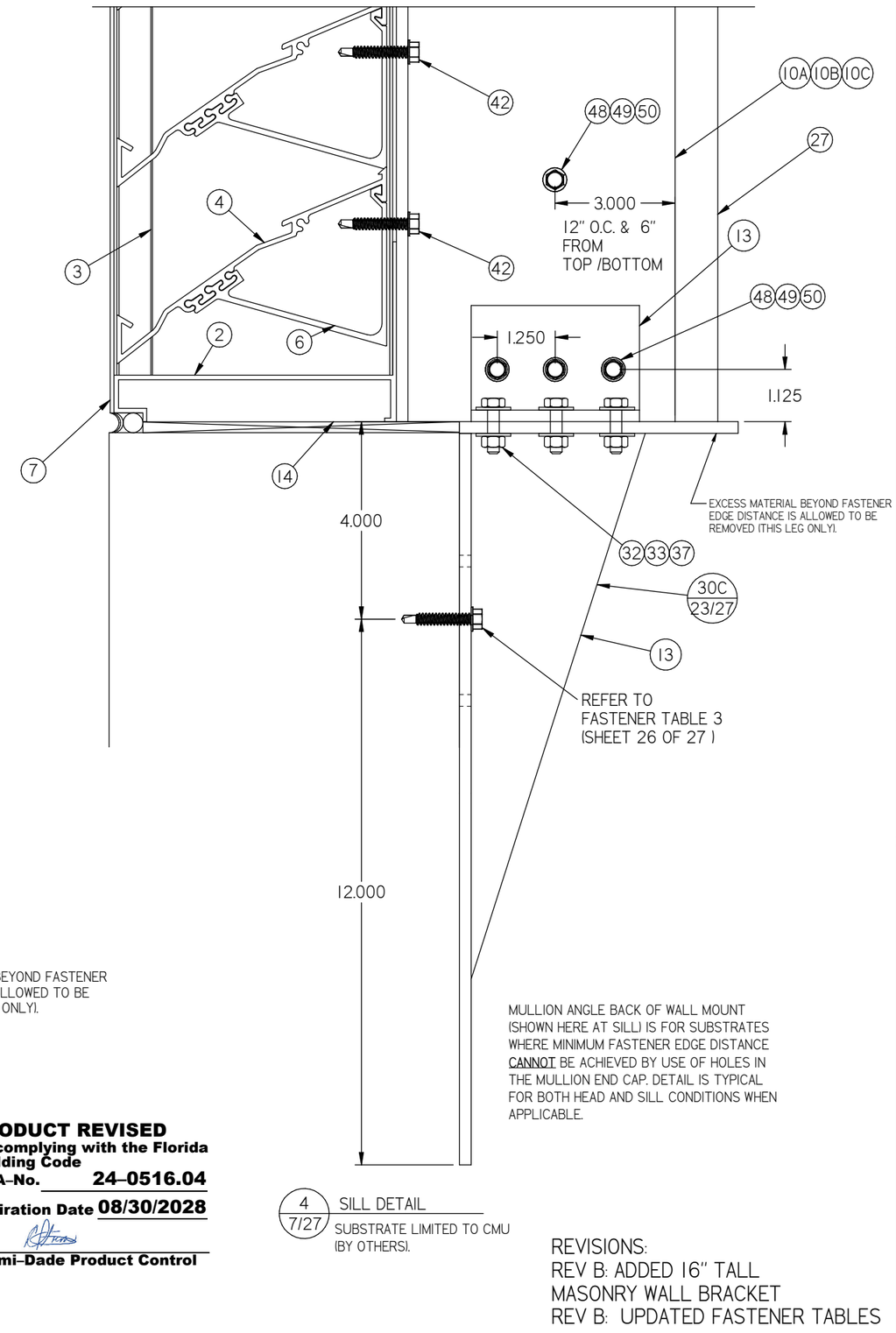

PRODUCT REVISED
as complying with the Florida Building Code
NOA-No. 24-0516.04
Expiration Date 08/30/2028
By
Miami-Dade Product Control

REVISIONS:
REV B: ADDED 16" TALL MASONRY WALL BRACKET
REV B: UPDATED FASTENER TABLES

DWN BY: fcortinas
CHK BY: BDennis
DATE: 11/29/2021
SCALE: NTS
SHEET: 7 OF 27
REV B
DWG. NO. 1606DHPM

Nailor Industries Inc.
4714 Winfield Road Houston, TX 77039
TEL: 281-590-1172 FAX: 281-590-3086
www.nailor.com

TITLE: 1606DHPM LOUVER MULLION ANGLE MOUNT HEAD & SILL DETAILS

WAYNE K. HELMILA
LICENSE
No. 59092
STATE OF FLORIDA
PROFESSIONAL ENGINEER

07/23/2024
COA: 9090

RICE
ENGINEERING
105 School Creek Trail
Luxemburg, WI 54217
Phone: (920) 617-1042
Fax: (920) 617-1100
www.rice-inc.com

Florida Firm No: F-01000005061
Certificate of Authorization: #9090
Wayne K. Helmila
Registration No: 59092

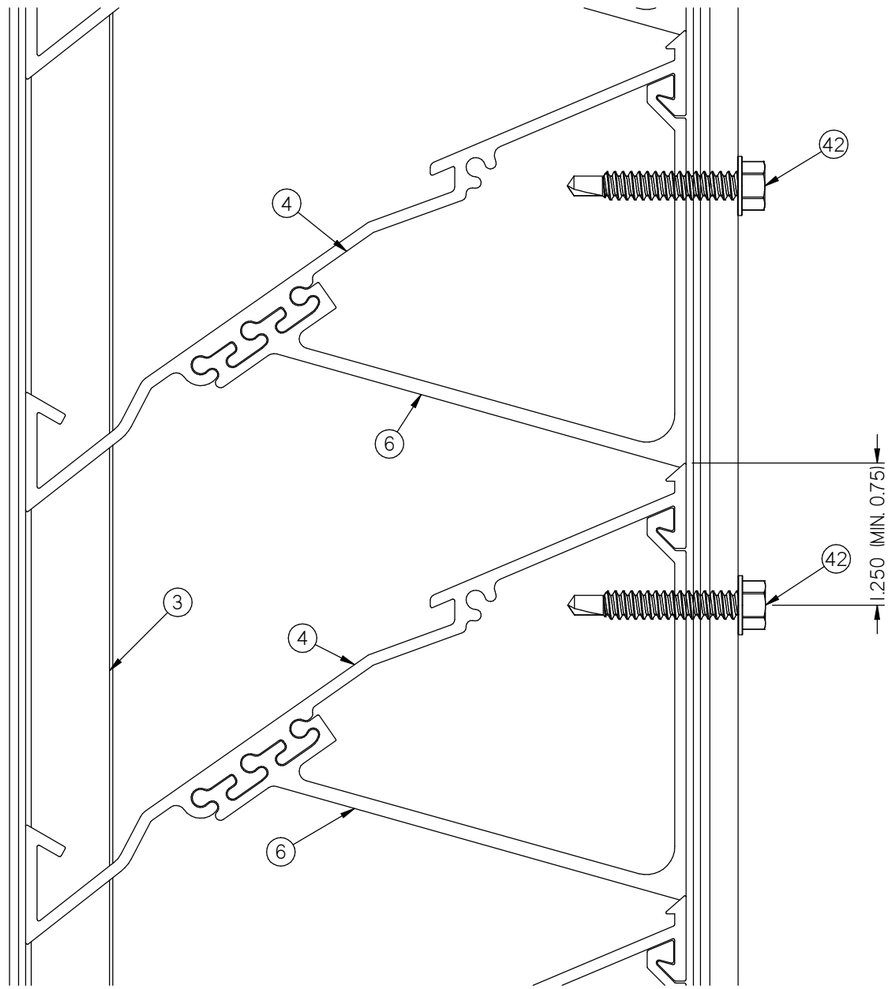

5
8/27
BLADE SUPPORT DETAIL

NOTE: THE BLADE SUPPORT ANGLE (ITEM 10 IS NOT SHOWN IN THE DETAILS IN ORDER TO IMPROVE CLARITY. THE BLADE SUPPORT ANGLE IS ATTACHED TO THE BLADE SUPPORT BRACE (ITEM 6).
BLADE SUPPORT BRACKET 6 (SHOWN) IS ANY OF THE DRAWINGS FOR DETAIL 6.

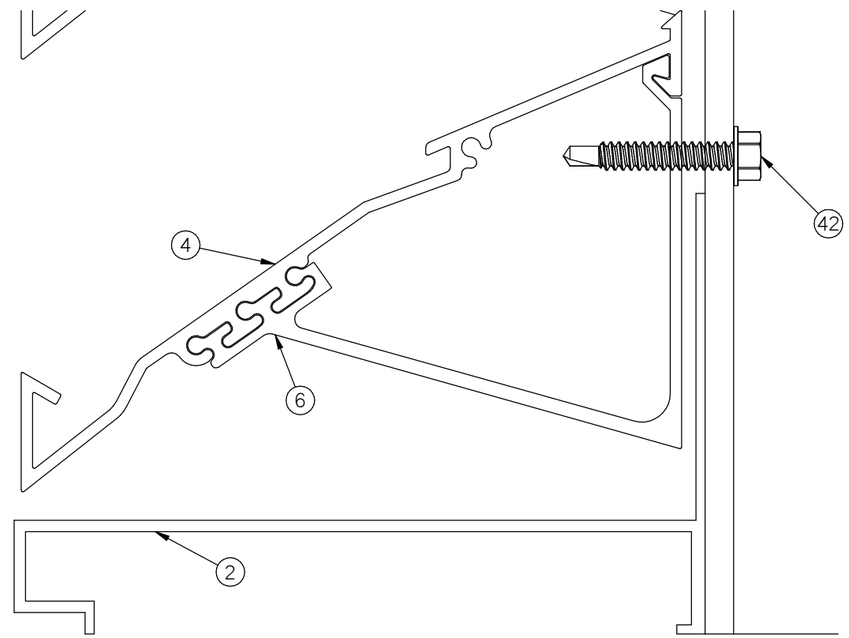

6
8/27
BOTTOM BLADE SUPPORT DETAIL

PRODUCT REVISED
as complying with the Florida Building Code
NOA-No. 24-0516.04
Expiration Date 08/30/2028
By
Miami-Dade Product Control

DWN BY: fcortinas
CHK BY: BDennis
DATE: 11/29/2021
SCALE: NTS
SHEET: 8 OF 27
REV B
DWG. NO. 1606DHPM

Nailor Industries Inc.
4714 Winfield Road Houston, TX 77039
www.nailor.com TEL: 281-590-1172 FAX: 281-590-3086

TITLE: 1606DHPM LOUVER BLADE SUPPORT DETAIL

WAYNE K. HELMILA
LICENSE
No. 59092
STATE OF FLORIDA
PROFESSIONAL ENGINEER

07/23/2024
COA: 9090

RICE
ENGINEERING
105 School Creek Trail
Luxemburg, WI 54217
Phone: (920) 617-1042
Fax: (920) 617-1100
www.rice-inc.com

Florida Firm No: F-01000005061
Certificate of Authorization: #9090
Wayne K. Helmila
Registration No: 59092

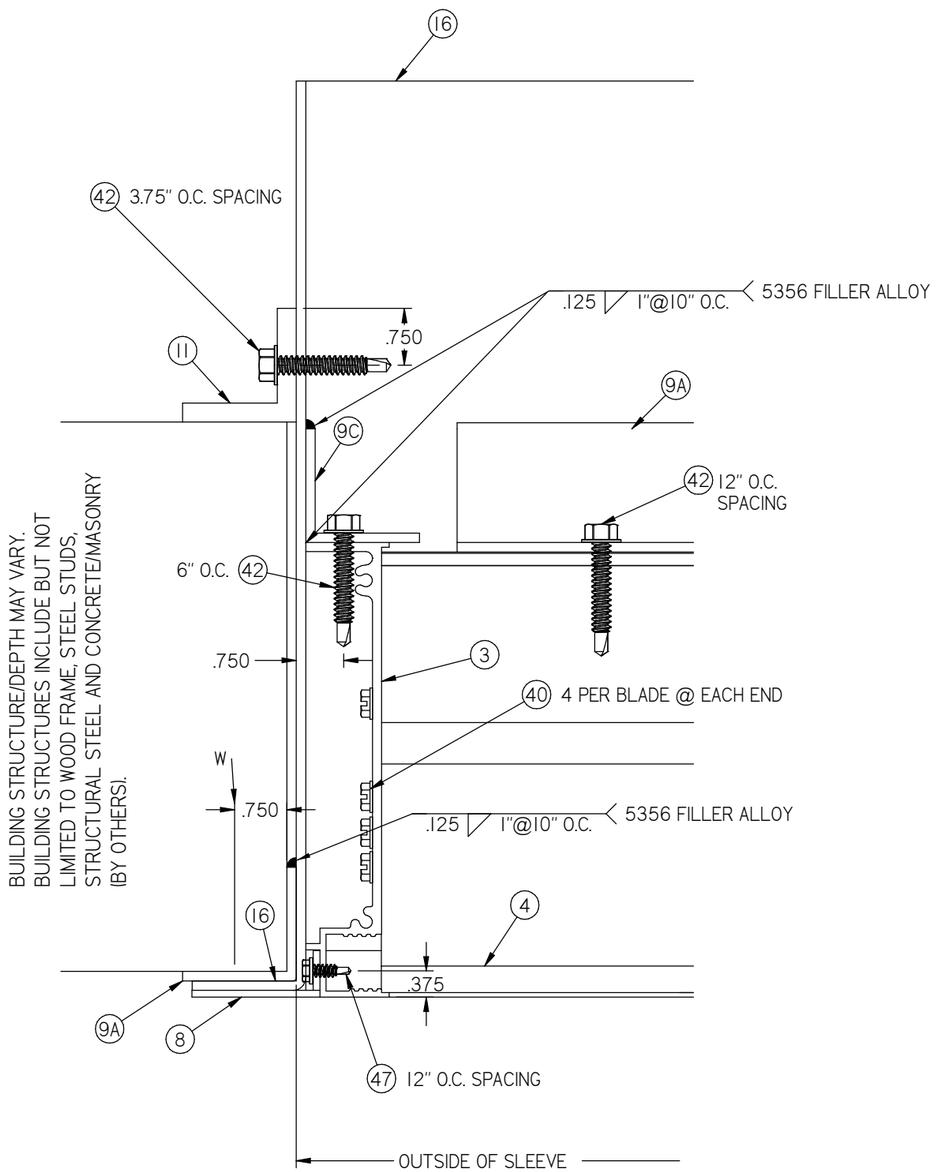

7 / 9/27 JAMB DETAIL

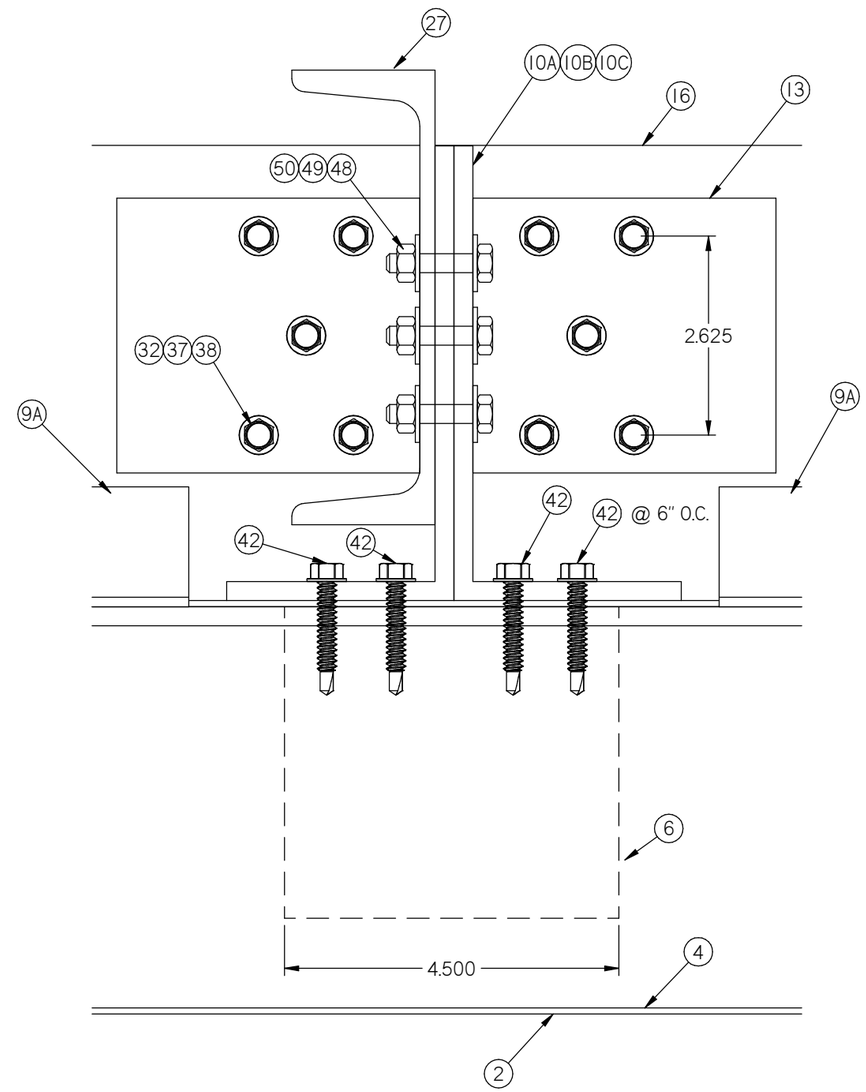

8 / 9/27 BLADE SUPPORT DETAIL
SLEEVE MOUNT

PRODUCT REVISED
as complying with the Florida Building Code
NOA-No. 24-0516.04
Expiration Date 08/30/2028
By
Miami-Dade Product Control

DWN BY: fcortinas | CHK BY: BDennis
DATE: 11/29/2021 | SCALE: NTS

SHEET: 9 OF 27

REV B

DWG. NO. 1606DHPM

Nailor Industries Inc.
4714 Winfield Road Houston, TX 77039
www.nailor.com TEL: 281-590-1172 FAX: 281-590-3086

TITLE: 1606DHPM LOUVER FLANGE FRAME SLEEVE MOUNT JAMB DETAILS

WAYNE K. HELMILA
LICENSE
No. 59092
STATE OF FLORIDA
PROFESSIONAL ENGINEER

07/23/2024
COA: 9090

RICE
ENGINEERING
105 School Creek Trail
Luxemburg, WI 54217
Phone: (920) 617-1042
Fax: (920) 617-1100
www.rice-inc.com

Florida Firm No: F-01000005061
Certificate of Authorization: #9090
Wayne K. Helmila
Registration No: 59092

PRODUCT REVISED
as complying with the Florida Building Code
NOA-No. 24-0516.04
Expiration Date 08/30/2028
By
Miami-Dade Product Control

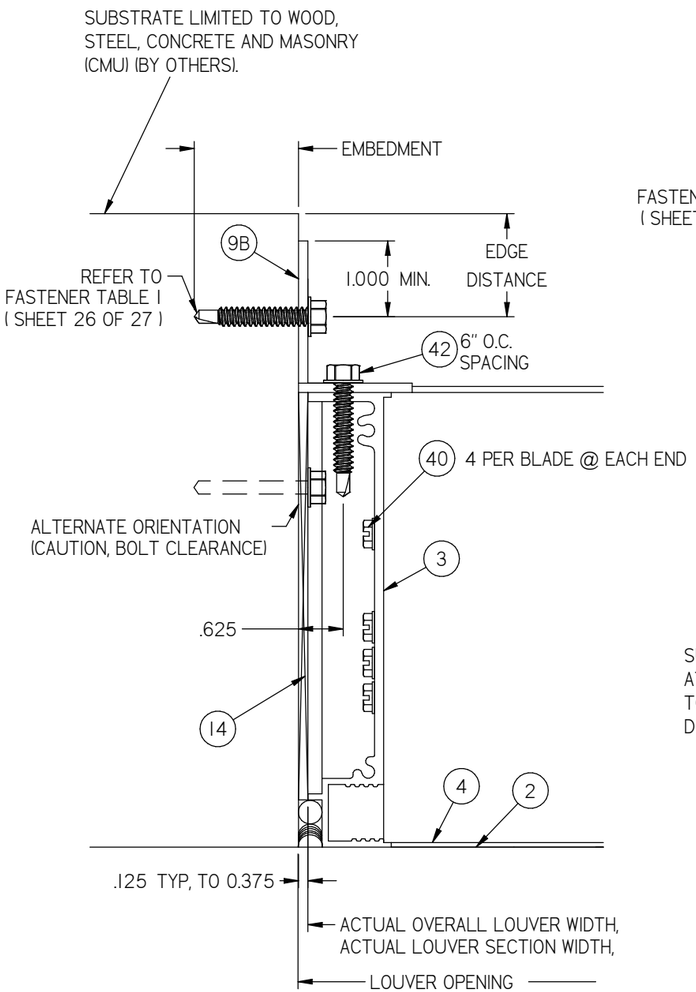

9 / 10/27 JAMB DETAIL

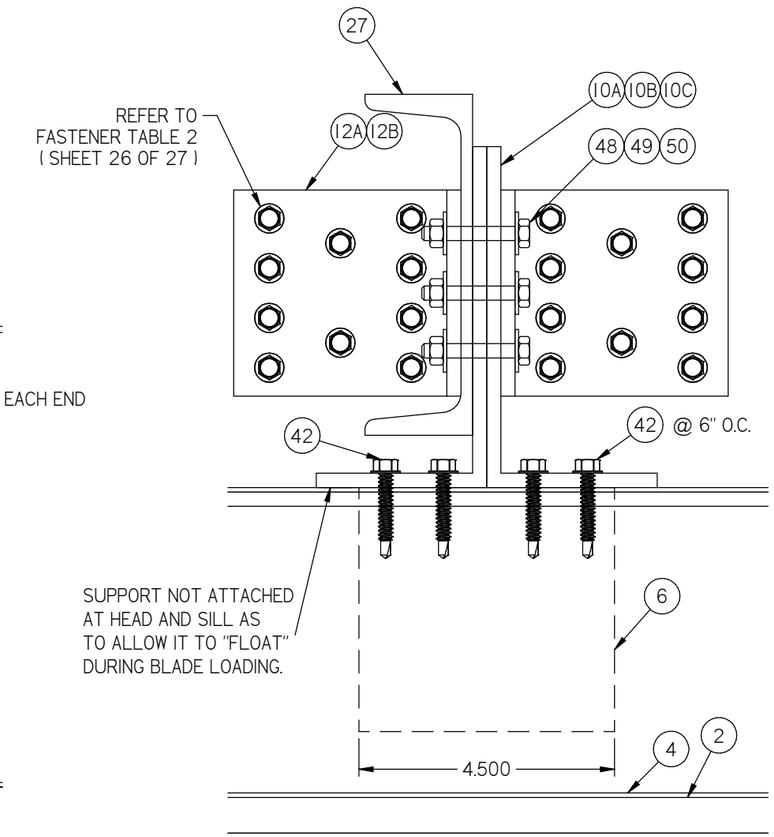

BLADE SUPPORT DIRECT MOUNT

10 / 10/27 BLADE SUPPORT DETAIL DIRECT MOUNT

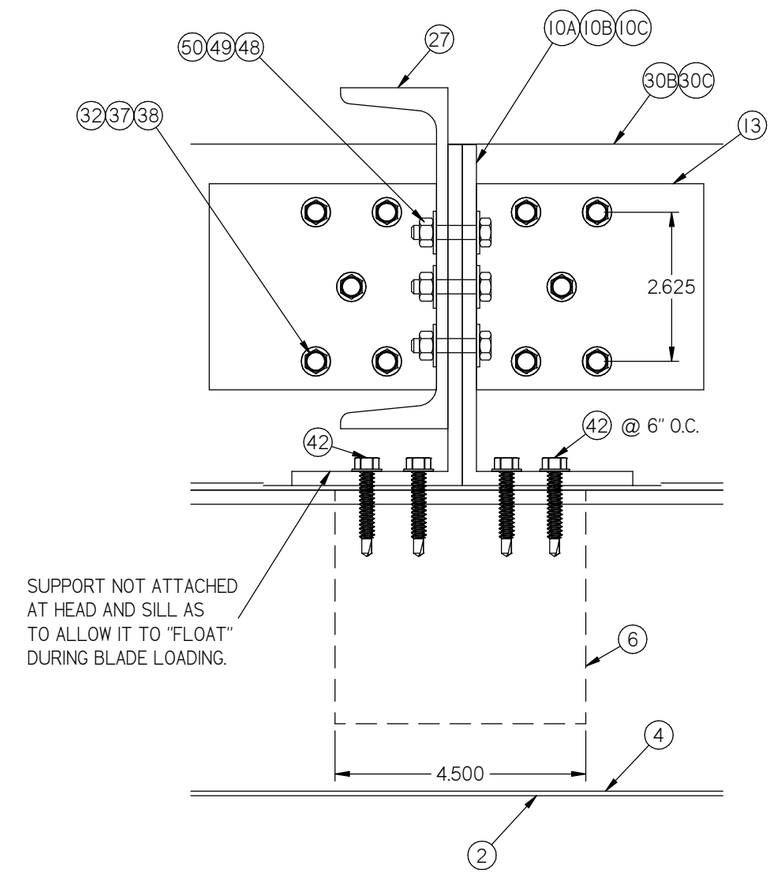

BLADE SUPPORT BACK OF WALL

10A / 10/27 BLADE SUPPORT DETAIL BACK OF OF WALL MOUNT FOR CONT. ANGLE

REVISIONS:
REV B: UPDATED FASTENER TABLES

DWN BY: fcortinas | CHK BY: BDennis
DATE: 11/29/2021 | SCALE: NTS
SHEET: 10 OF 27
DWG. NO. 1606DHPM | REV B

Nailor Industries Inc.
4714 Winfield Road Houston, TX 77039
TEL: 281-590-1172 FAX: 281-590-3086
www.nailor.com

TITLE: 1606DHPM LOUVER COUNTINOUS ANGLE MOUNT JAMB DETAIL

WAYNE K. HELMILA
LICENSE
No. 59092
STATE OF FLORIDA
PROFESSIONAL ENGINEER

07/23/2024
COA: 9090

RICE
ENGINEERING
105 School Creek Trail
Luxemburg, WI 54217
Phone: (920) 617-1042
Fax: (920) 617-1100
www.rice-inc.com

Florida Firm No: F-01000005061
Certificate of Authorization: #9090
Wayne K. Helmila
Registration No: 59092

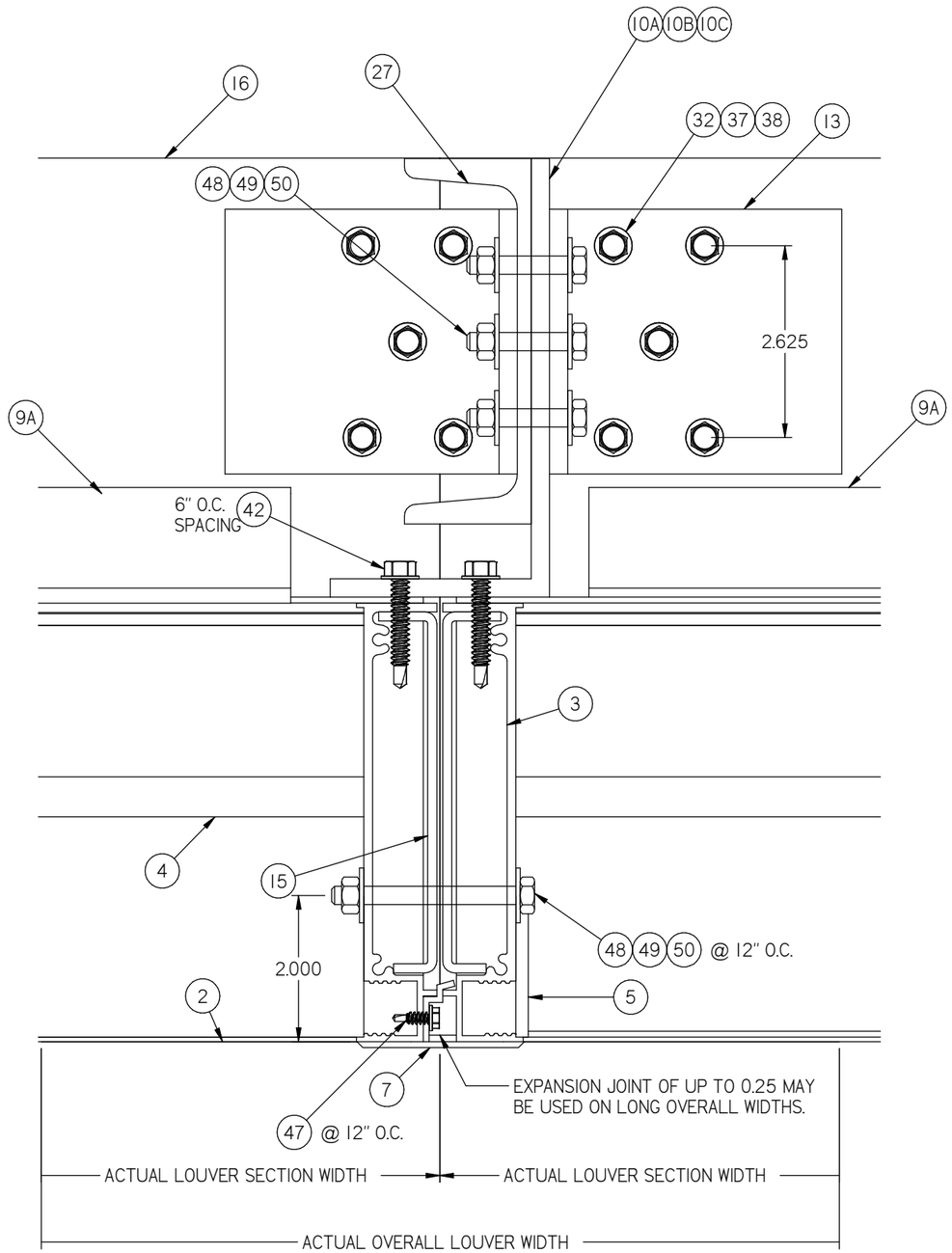

11
11/27
MULLION DETAIL
SLEEVE MOUNT

PRODUCT REVISED
as complying with the Florida Building Code
NOA-No. 24-0516.04
Expiration Date 08/30/2028
By
Miami-Dade Product Control

DWN BY: fcortinas
CHK BY: BDennis
DATE: 11/29/2021
SCALE: NTS
SHEET: 11 OF 27
REV B
DWG. NO. 1606DHPM

Nailor Industries Inc.
4714 Winfield Road Houston, TX 77039
www.nailor.com TEL: 281-590-1172 FAX: 281-590-3086

TITLE:
1606DHPM LOUVER
FLANGE FRAME SLEEVE MOUNT
MULLION DETAIL

WAYNE K. HELMILA
LICENSE
No. 59092
STATE OF
FLORIDA
PROFESSIONAL ENGINEER

07/23/2024
COA: 9090

RICE
ENGINEERING
105 School Creek Trail
Luxemburg, WI 54217
Phone: (920) 617-1042
Fax: (920) 617-1100
www.rice-inc.com

Florida Firm No: F-01000005061
Certificate of Authorization: #9090
Wayne K. Helmila
Registration No: 59092

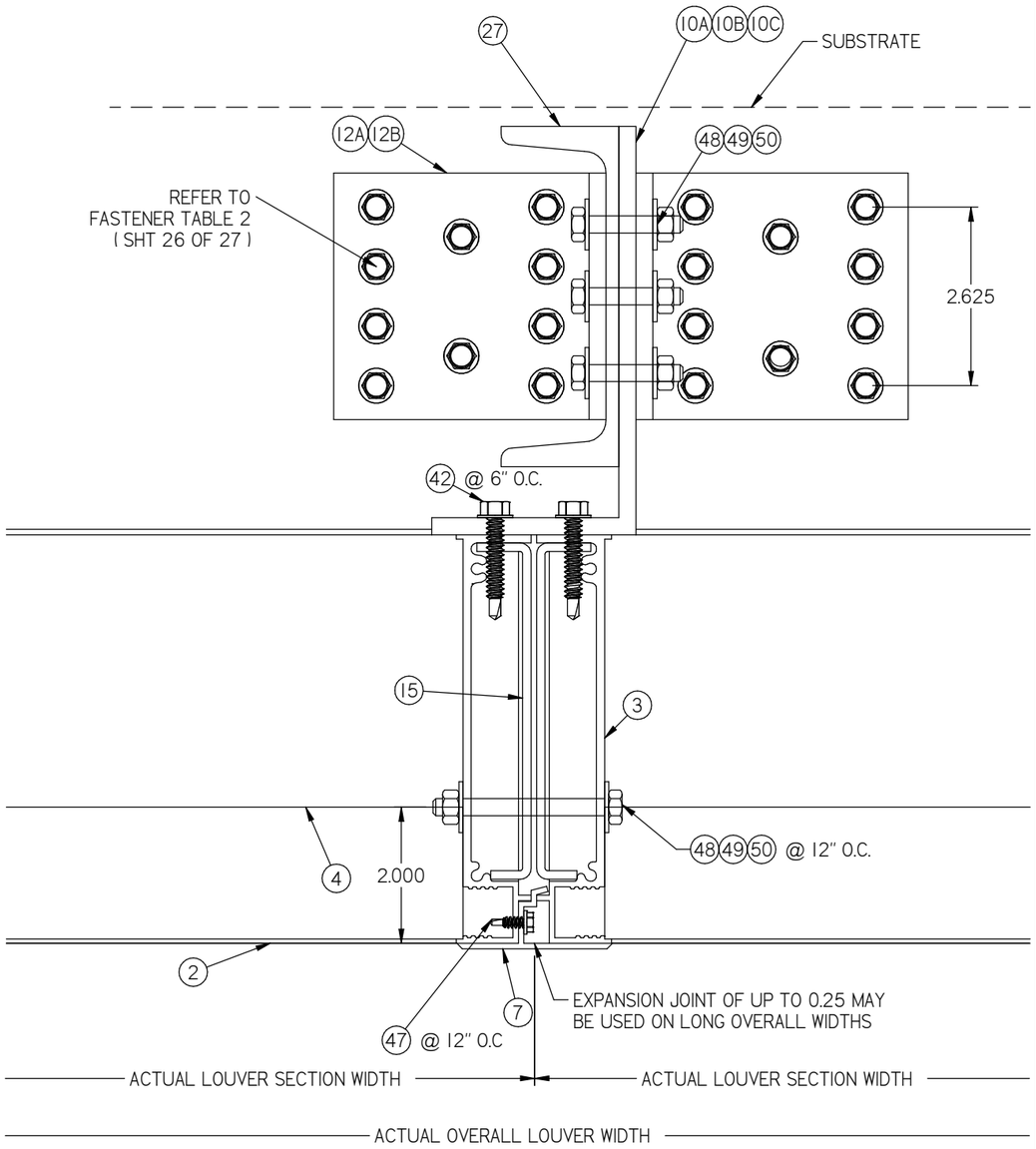

MULLION ANGLE DIRECT MOUNT (SHOWN HERE AT HEAD) IS FOR SUBSTATES WHERE MINIMUM FASTENER EDGE DISTANCE CAN BE ACHIEVED BY USE OF HOLES IN THE MULLION END CAP. DETAIL IS TYPICAL FOR BOTH HEAD AND SILL CONDITIONS WHEN APPLICABLE.

12A / 12/27 MULLION DETAIL DIRECT MOUNT

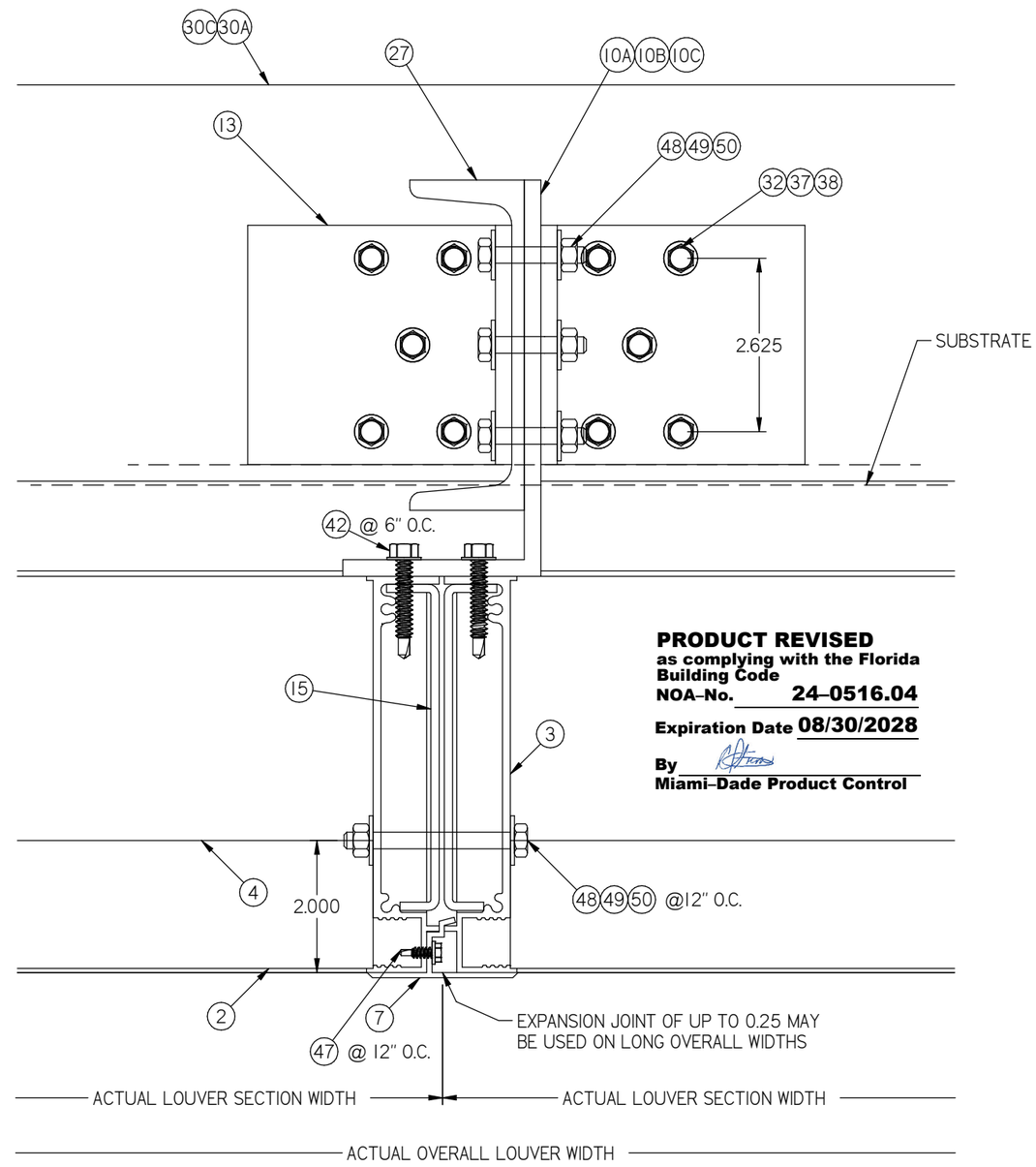

PRODUCT REVISED
as complying with the Florida Building Code
NOA-No. 24-0516.04
Expiration Date 08/30/2028
By
Miami-Dade Product Control

MULLION ANGLE BACK OF WALL MOUNT (SHOWN HERE AT SILL) IS FOR SUBSTATES WHERE MINIMUM FASTENER EDGE DISTANCE CANNOT BE ACHIEVED BY USE OF HOLES IN THE MULLION END CAP. DETAIL IS TYPICAL FOR BOTH HEAD AND SILL CONDITIONS WHEN APPLICABLE.

12B / 12/27 MULLION DETAIL BACK OF WALL MOUNT

REVISIONS:
REV B: UPDATED FASTENER TABLES

DWN BY: fcortinas
CHK BY: BDennis
DATE: 11/29/2021
SCALE: NTS
SHEET: 12 OF 27
REV B
DWG. NO. 1606DHPM

Nailor Industries Inc.
4714 Winfield Road Houston, TX 77039
TEL: 281-590-1172 FAX: 281-590-3086
www.nailor.com

TITLE: 1606DHPM LOUVER
COUNTINOUS ANGLE MOUNT
MULLION DETAIL

WAYNE K. HELMILA
LICENSE
No. 59092
STATE OF
FLORIDA
PROFESSIONAL ENGINEER

07/23/2024
COA: 9090

RICE
ENGINEERING
105 School Creek Trail
Luxemburg, WI 54217
Phone: (920) 617-1042
Fax: (920) 617-1100
www.rice-inc.com

Florida Firm No: F-01000005061
Certificate of Authorization: #9090
Wayne K. Helmila
Registration No: 59092

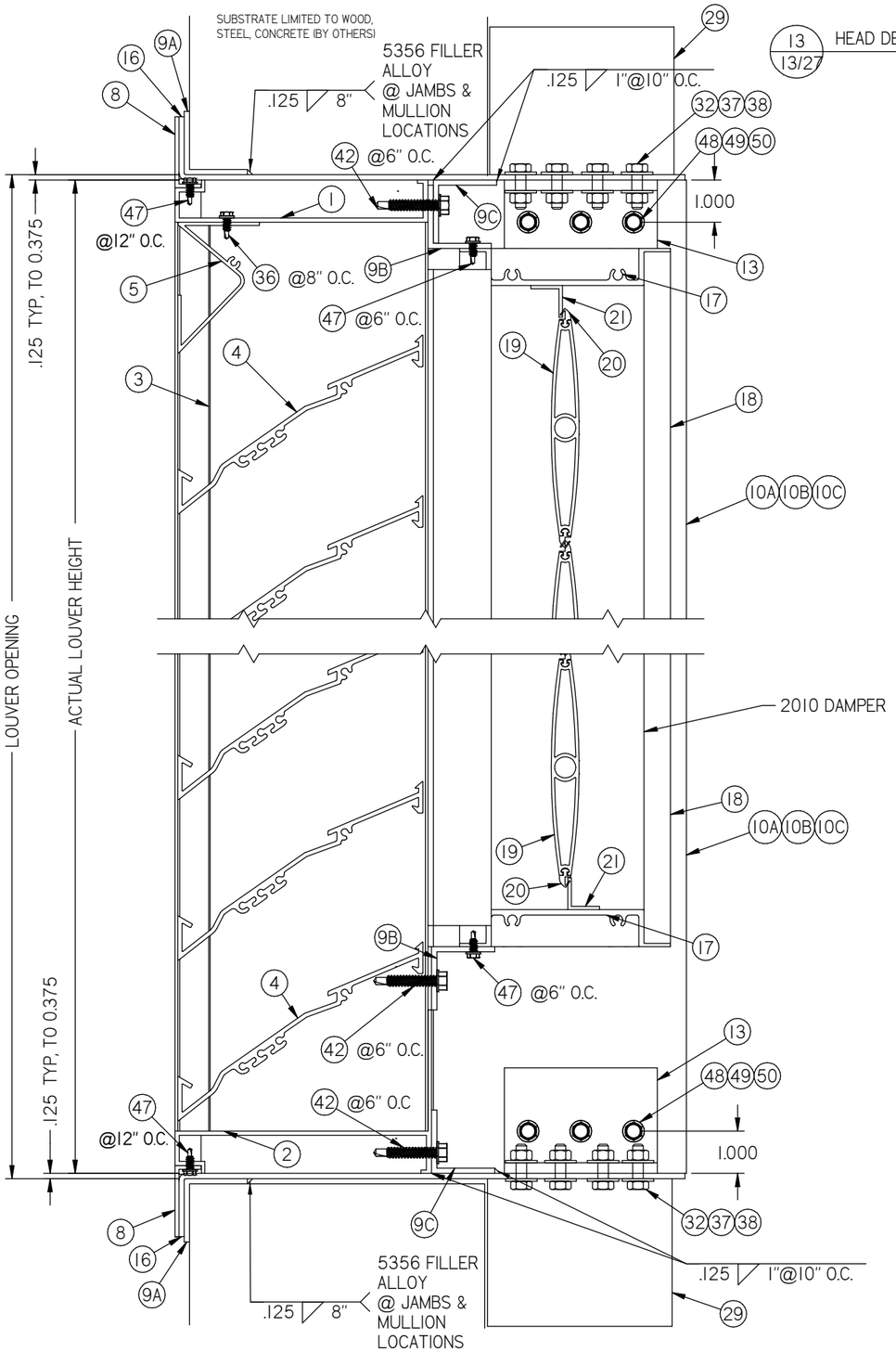

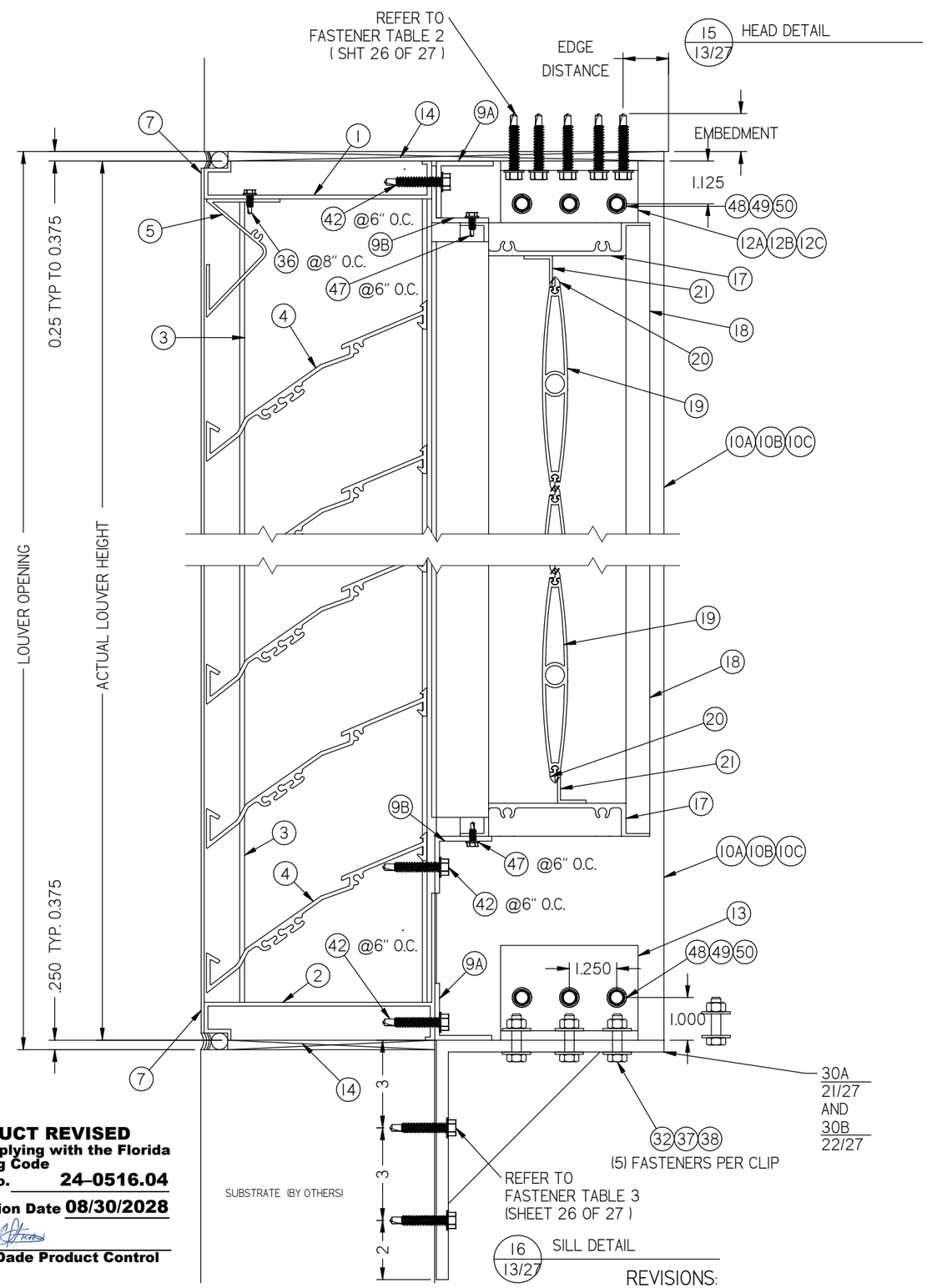

PRODUCT REVISED
as complying with the Florida Building Code
NOA-No. 24-0516.04
Expiration Date 08/30/2028
By
Miami-Dade Product Control

REVISIONS:
REV B: UPDATED FASTENER TABLES

DWN BY: fcortinas | CHK BY: BDennis
DATE: 11/29/2021 | SCALE: NTS
SHEET: 13 OF 27
REV B
DWG. NO. 1606DHPM

Nailor Industries Inc.
4714 Winfield Road Houston, TX 77039
TEL: 281-590-1172 FAX: 281-590-3086
www.nailor.com

TITLE: 1606DHPM LOUVER / DAMPER FLANGE FRAME W/SLEEVE MULLION ANGLE MOUNT HEAD & SILL DETAIL

WAYNE K. HELMILA
LICENSE
No. 59092
STATE OF FLORIDA
PROFESSIONAL ENGINEER

07/23/2024
COA: 9090

RICE
ENGINEERING
105 School Creek Trail
Luxemburg, WI 54217
Phone: (920) 617-1042
Fax: (920) 617-1100
www.rice-inc.com
Florida Firm No: F-01000005061
Certificate of Authorization: #9090
Wayne K. Helmila
Registration No: 59092

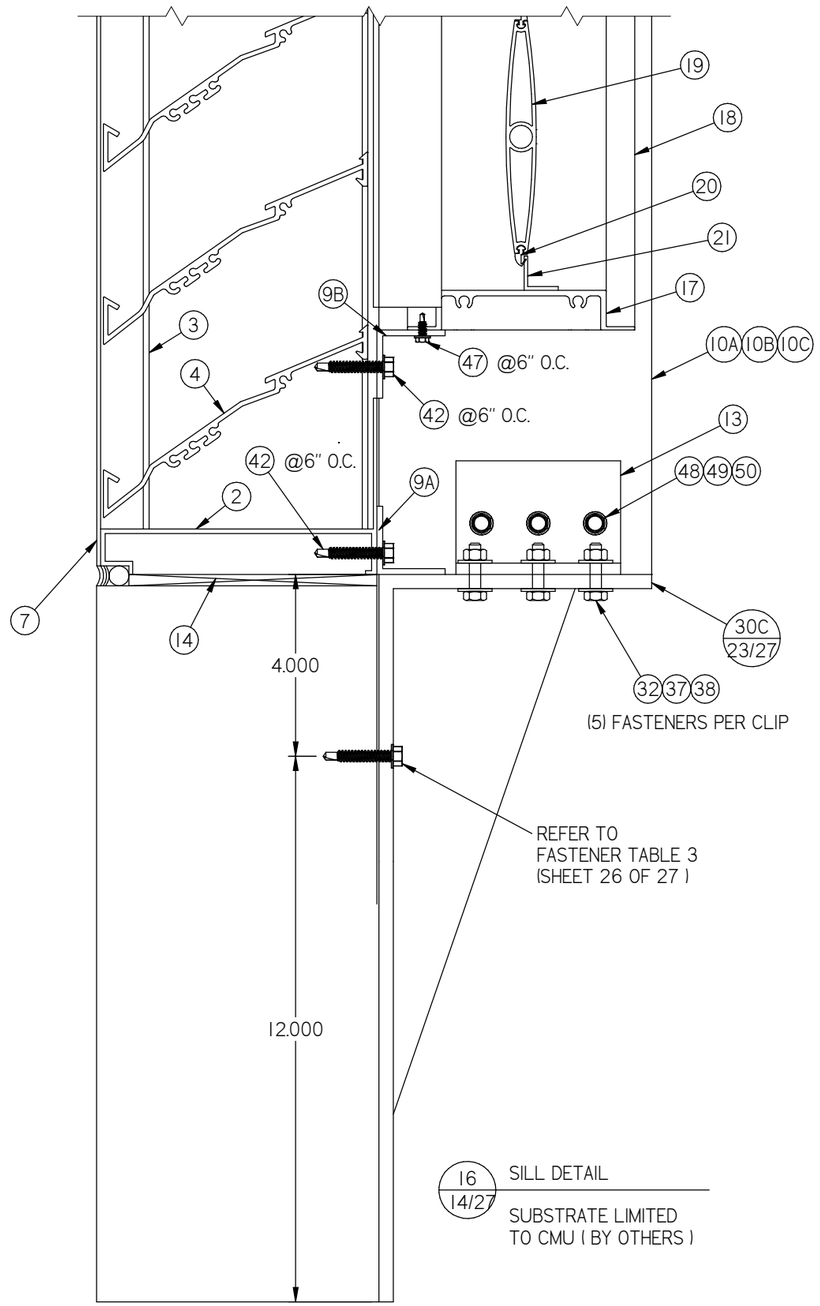

PRODUCT REVISED
as complying with the Florida Building Code
NOA-No. 24-0516.04
Expiration Date 08/30/2028
By
Miami-Dade Product Control

REVISIONS:
REV B: ADDED 16" TALL
MASONRY WALL BRACKET
W/ UPDATED FASTENER TABLES

DWN BY: fcortinas
CHK BY: BDennis
DATE: 11/29/2021
SCALE: NTS
SHEET: 14 OF 27
REV B
DWG. NO. 1606DHPM

Nailor Industries Inc.
4714 Winfield Road Houston, TX 77039
TEL: 281-590-1172 FAX: 281-590-3086
www.nailor.com

TITLE:
1606DHPM LOUVER / DAMPER
MULLION ANGLE MOUNT
CMU SUBSTRATE
HEAD & SILL DETAIL

WAYNE K. HELMILA
LICENSE
No. 59092
STATE OF FLORIDA
PROFESSIONAL ENGINEER

07/23/2024
COA: 9090

RICE
ENGINEERING
105 School Creek Trail
Luxemburg, WI 54217
Phone: (920) 617-1042
Fax: (920) 617-1100
www.rice-inc.com

Florida Firm No: F-01000005061
Certificate of Authorization: #9090
Wayne K. Helmila
Registration No: 59092

PRODUCT REVISED
as complying with the Florida Building Code
NOA-No. 24-0516.04
Expiration Date 08/30/2028
By
Miami-Dade Product Control

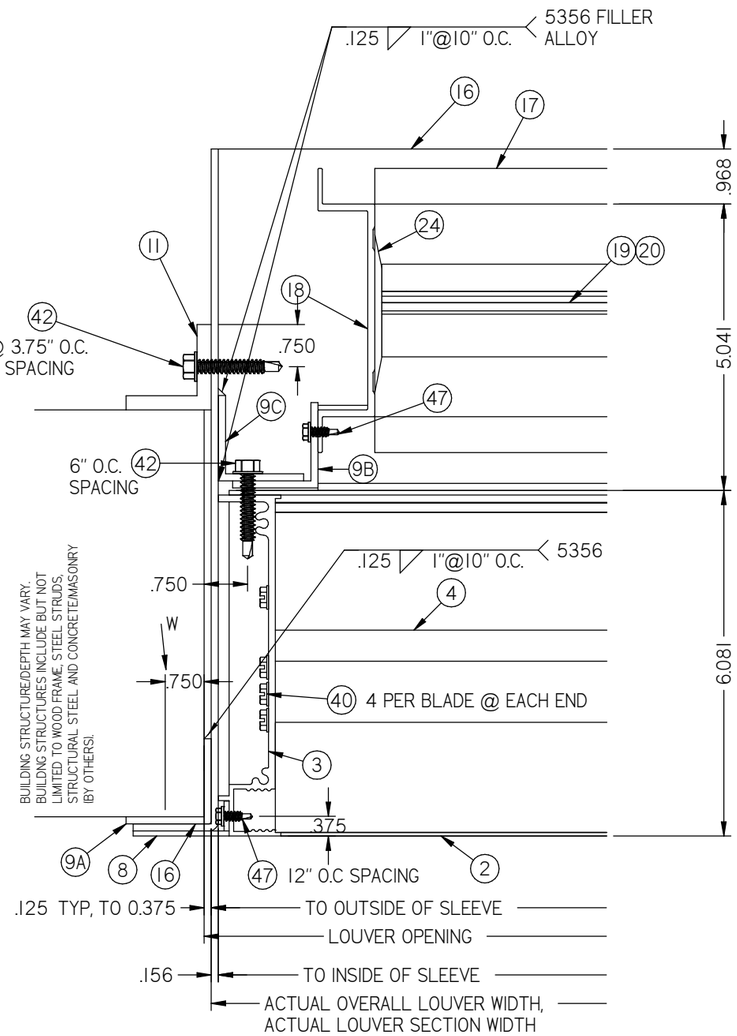

17 / 15/27 JAMB DETAIL

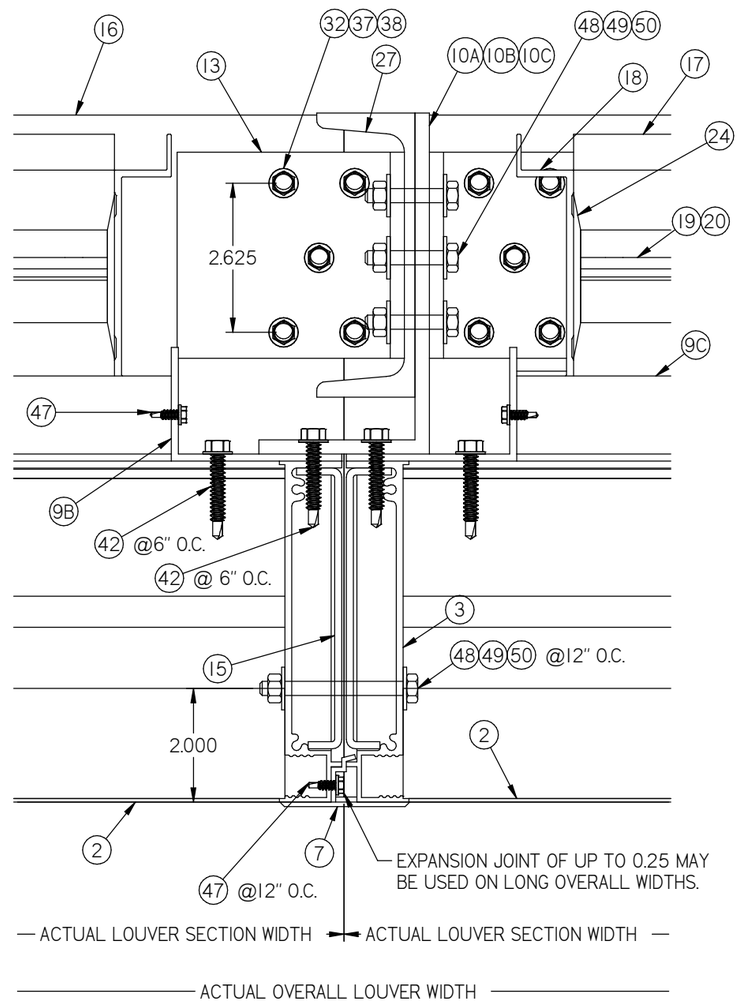

18 / 15/27 MULLION DETAIL SLEEVE MOUNT

REVISIONS:
REV B: UPDATED PAGE NUMBERS

DWN BY: fcortinas | CHK BY: BDennis
DATE: 11/29/2021 | SCALE: NTS
SHEET: 15 OF 27
DWG. NO. 1606DHPM | REV B

Nailor Industries Inc.
4714 Winfield Road Houston, TX 77039
www.nailor.com TEL: 281-590-1172 FAX: 281-590-3086

TITLE: 1606DHPM LOUVER / DAMPER FLANGE FRAME SLEEVE MOUNT JAMB AND MULLION DETAIL

WAYNE K. HELMILA
LICENSE
No. 59092
STATE OF FLORIDA
PROFESSIONAL ENGINEER

07/23/2024
COA: 9090

RICE
ENGINEERING
105 School Creek Trail
Luxemburg, WI 54217
Phone: (920) 617-1042
Fax: (920) 617-1100
www.rice-inc.com
Florida Firm No: F-01000005061
Certificate of Authorization: #9090
Wayne K. Helmila
Registration No: 59092

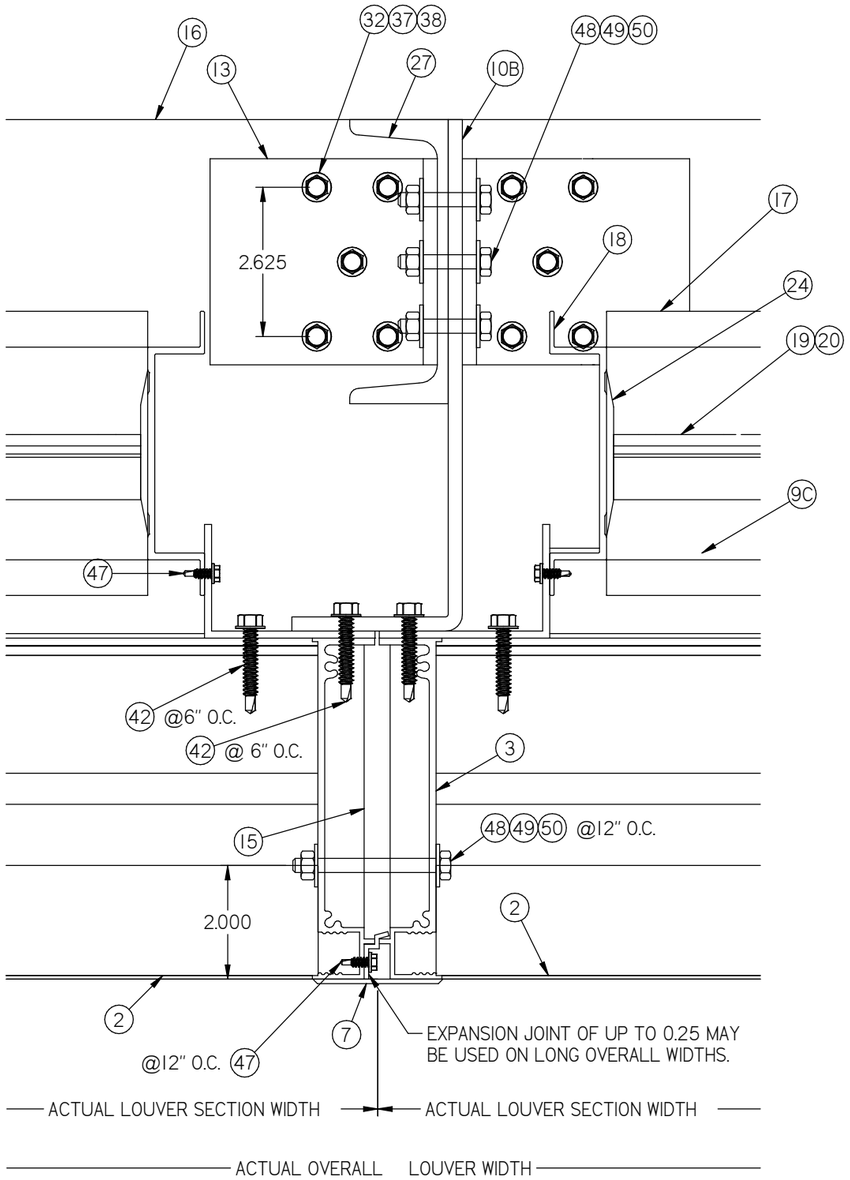

18A
16/27

MULLION DETAIL
SLEEVE MOUNT

FOR 36" BLADE SLEEVE MOUNT
STEEL C6X8.2 & ALUM 9X3 X 1/4 "

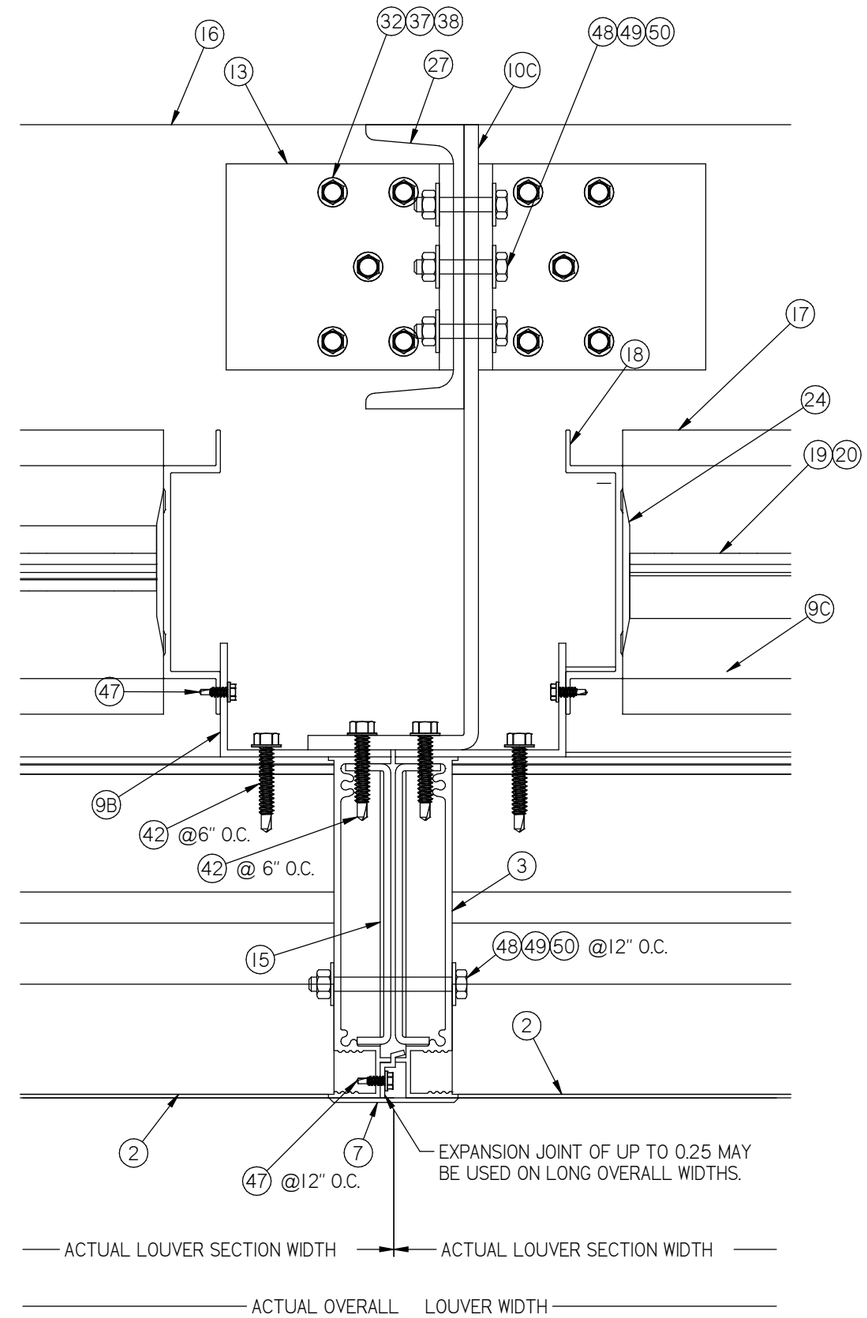

18B
16/27

MULLION DETAIL
SLEEVE MOUNT

FOR 36" BLADE SLEEVE MOUNT
STEEL C6X8.2 & ALUM 11X3 X 1/4 "

PRODUCT REVISED
as complying with the Florida Building Code
NOA-No. 24-0516.04
Expiration Date 08/30/2028
By
Miami-Dade Product Control

REVISIONS:
REV B: ADDED 9X3 ANGLE AND 11 X 3 ANGLE SECTION.
REV B: UPDATED PAGE NUMBER.

DWN BY: fcortinas
CHK BY: BDennis
DATE: 11/29/2021
SCALE: NTS
SHEET: 16 OF 27
REV B
DWG. NO. 1606DHPM

Nailor Industries Inc.
4714 Winfield Road Houston, TX 77039
TEL: 281-590-1172 FAX: 281-590-3086
www.nailor.com

TITLE:
1606DHPM LOUVER / DAMPER
FLANGE FRAME SLEEVE MOUNT
9 X3 X 1/4 & 9 X 11 X 1/4 ANGLE
MULLION DETAIL

WAYNE K. HELMILA
LICENSE
No. 59092
STATE OF FLORIDA
PROFESSIONAL ENGINEER

07/23/2024
COA: 9090

RICE
ENGINEERING
105 School Creek Trail
Luxemburg, WI 54217
Phone: (920) 617-1042
Fax: (920) 617-1100
www.rice-inc.com

Florida Firm No: F-01000005061
Certificate of Authorization: #9090
Wayne K. Helmila
Registration No: 59092

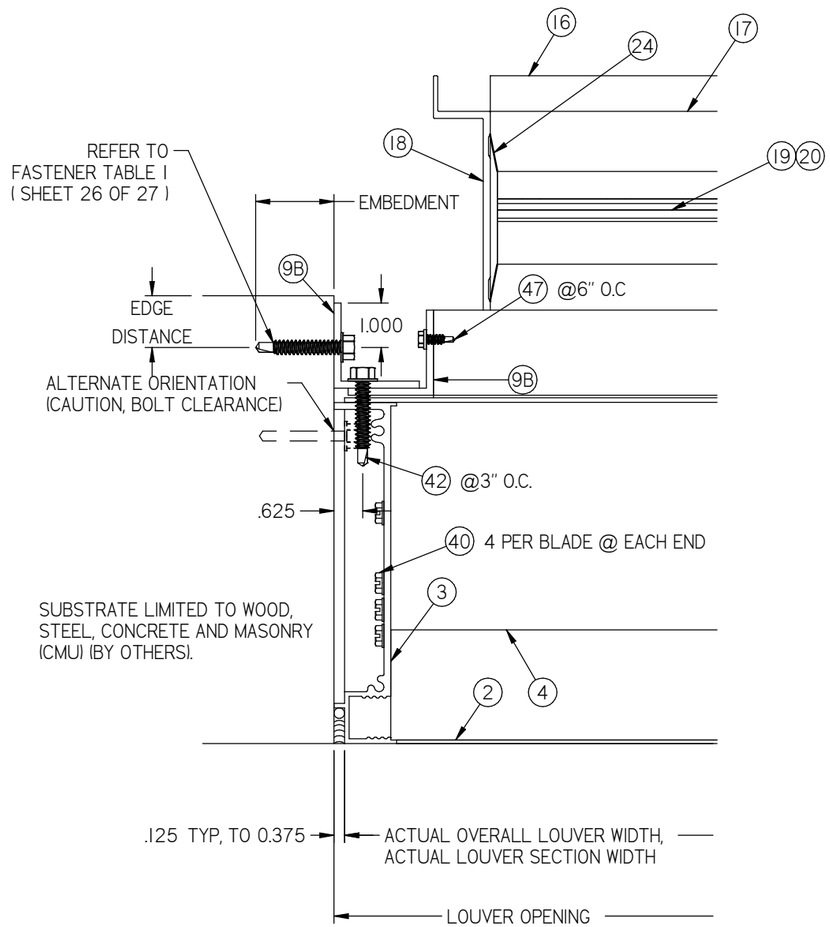

19 / 17/27 JAMB DETAIL

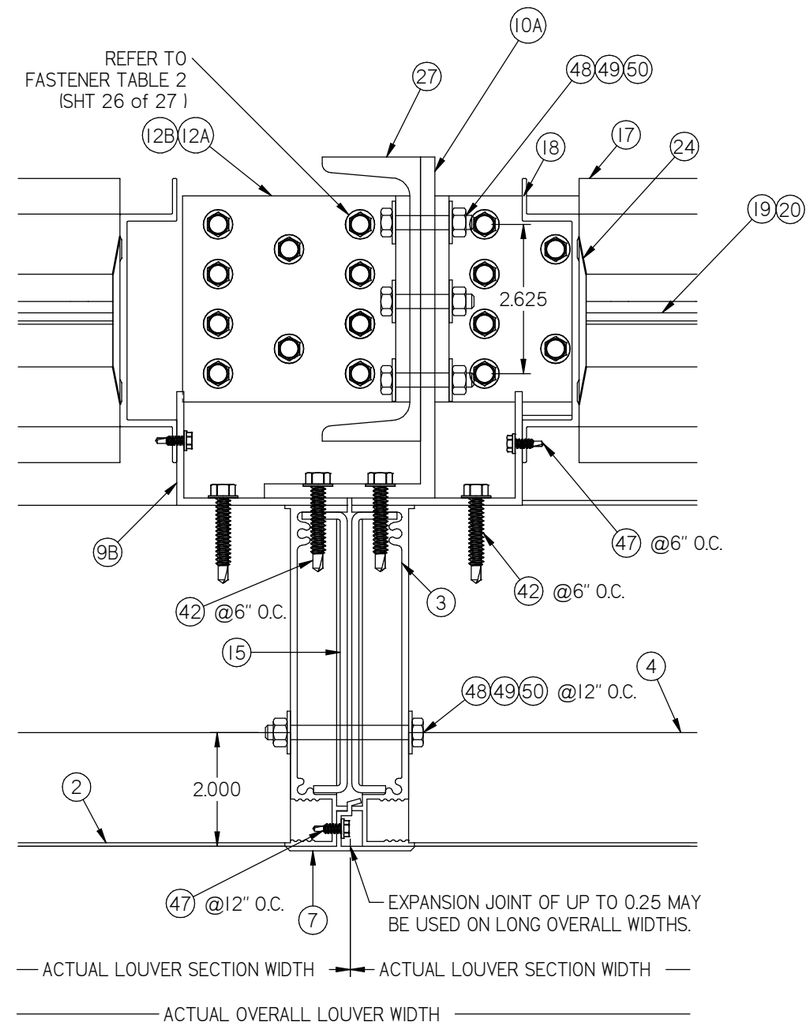

20 / 17/27 MULLION DETAIL DIRECT MOUNT

PRODUCT REVISED
as complying with the Florida Building Code
NOA-No. 24-0516.04
Expiration Date 08/30/2028
By _____
Miami-Dade Product Control

REVISIONS:
REV B: UPDATED FASTENER TABLES AND PAGE NUMBERS.

DWN BY: fcortinas
CHK BY: BDennis
DATE: 11/29/2021
SCALE: NTS

SHEET: 17 OF 27

REV B

DWG. NO. 1606DHPM

Nailor Industries Inc.
4714 Winfield Road Houston, TX 77039
TEL: 281-590-1172 FAX: 281-590-3086
www.nailor.com

TITLE: 1606DHPM LOUVER / DAMPER CONTINUOUS ANGLE MOUNT JAMB AND MULLION DETAIL

WAYNE K. HELMILA
LICENSE
No. 59092
STATE OF FLORIDA
PROFESSIONAL ENGINEER

07/23/2024
COA: 9090

RICE
ENGINEERING
105 School Creek Trail
Luxemburg, WI 54217
Phone: (920) 617-1042
Fax: (920) 617-1100
www.rice-inc.com

Florida Firm No: F-01000005061
Certificate of Authorization: #9090
Wayne K. Helmila
Registration No: 59092

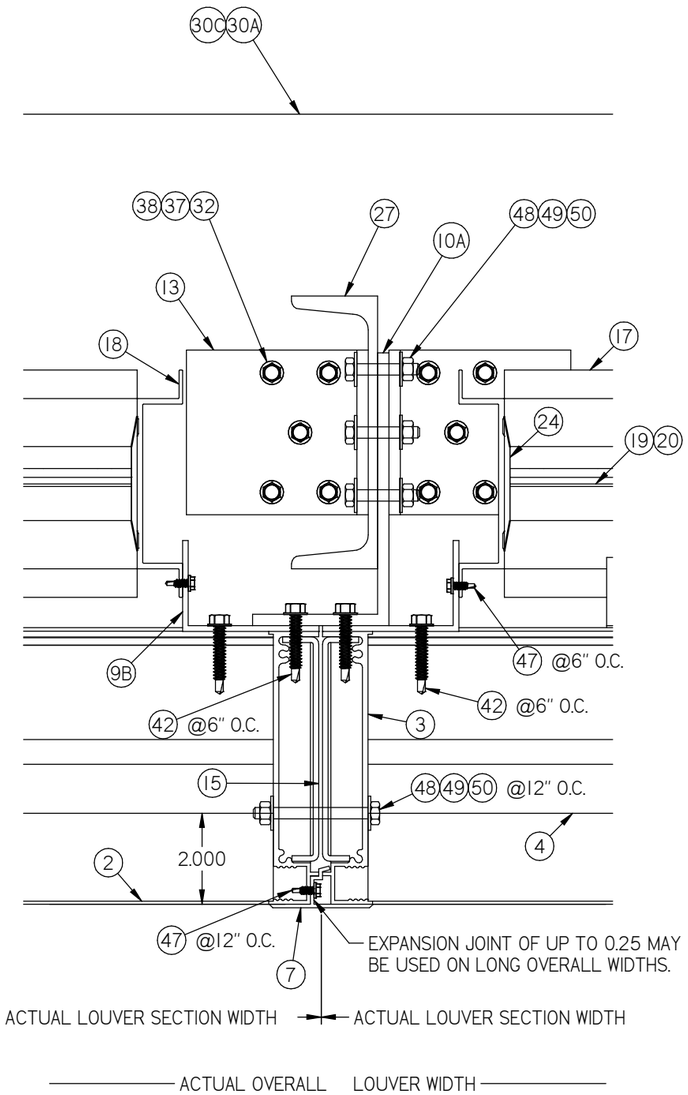

20 A
18/27

MULLION DETAIL BACK OF WALL MOUNT

FOR 36" BLADE SLEEVE MOUNT
STEEL C6X8.2 & ALUM 6X3 X 1/4 "

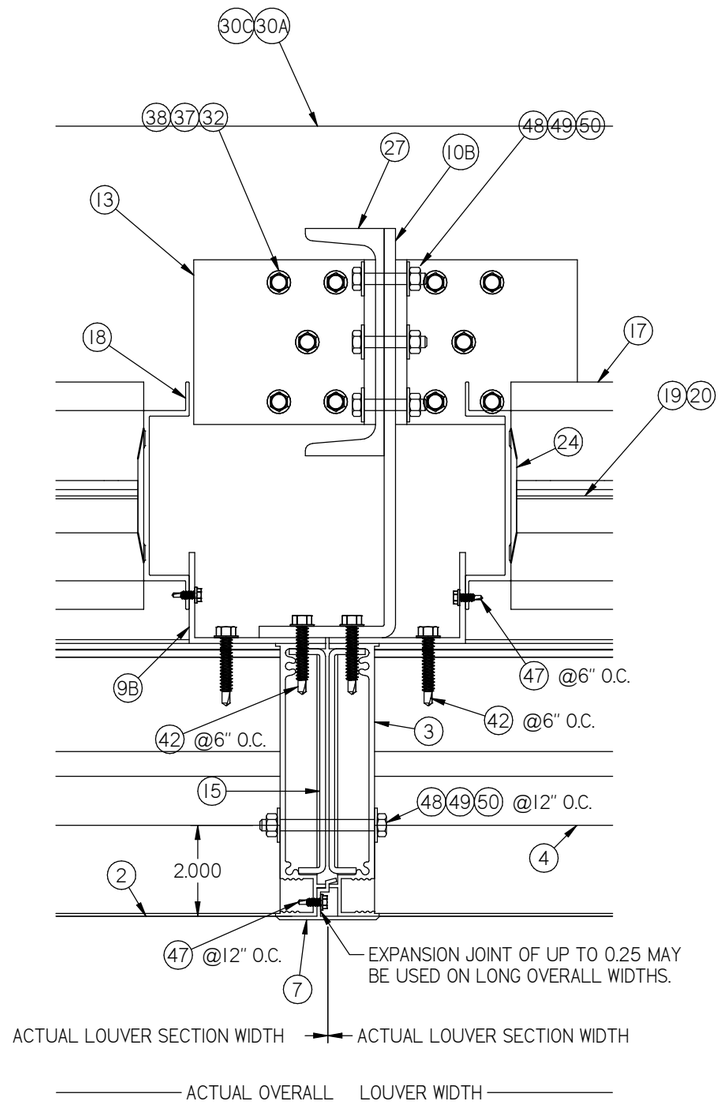

20 B
18/27

MULLION DETAIL BACK OF WALL MOUNT

FOR 36" BLADE SLEEVE MOUNT
STEEL C6X8.2 & ALUM 9X3 X 1/4 "

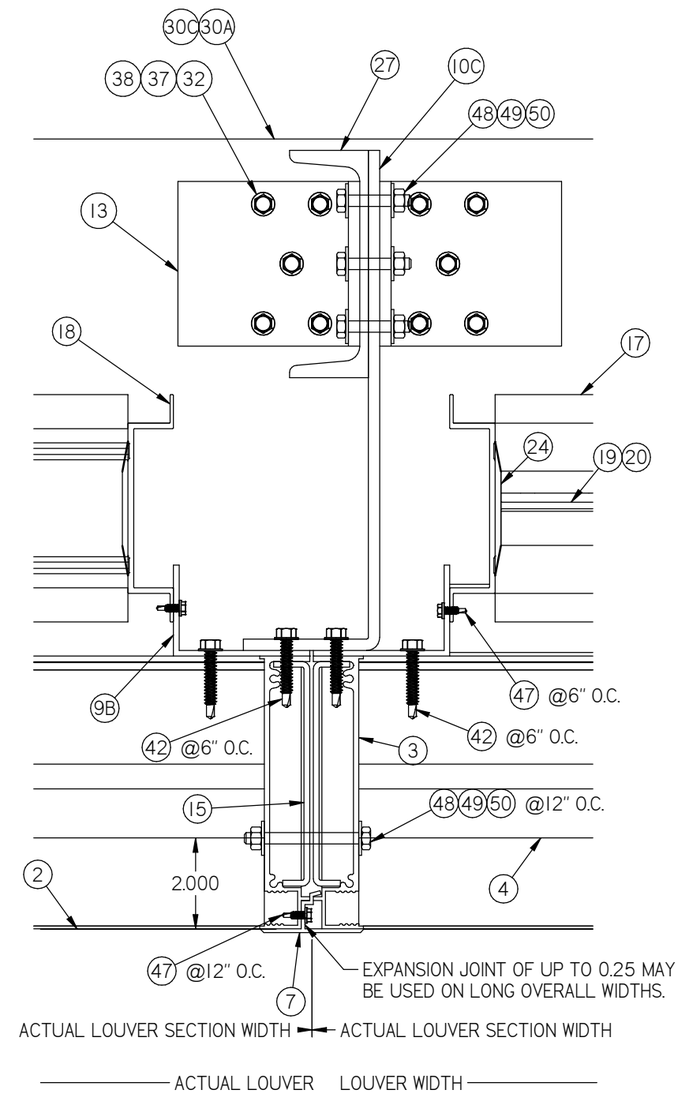

20C
18/27

MULLION DETAIL BACK OF WAL MOUNT

FOR 36" BLADE SLEEVE MOUNT
STEEL C6X8.2 & ALUM 11X3 X 1/4 "

PRODUCT REVISED
as complying with the Florida Building Code
NOA-No. 24-0516.04
Expiration Date 08/30/2028
By
Miami-Dade Product Control

REVISIONS:
REV B: ADDED 9X3 ANGLE AND 11 X 3 ANGLE SECTION.
REV B: UPDATED PAGE NUMBER.

DWN BY: fcortinas
CHK BY: BDennis
DATE: 11/29/2021
SCALE: NTS
SHEET: 18 OF 27
REV B
DWG. NO. 1606DHPM

Nailor Industries Inc.
4714 Winfield Road Houston, TX 77039
TEL: 281-590-1172 FAX: 281-590-3086
www.nailor.com

TITLE: 1606DHPM LOUVER / DAMPER CONTINUOUS ANGLE MOUNT 9 X3 X 1/4 & 9 X 11 X 1/4 ANGLE MULLION DETAIL

WAYNE K. HELMILA
LICENSE
No. 59092
STATE OF FLORIDA
PROFESSIONAL ENGINEER

07/23/2024
COA: 9090

RICE
ENGINEERING
105 School Creek Trail
Luxemburg, WI 54217
Phone: (920) 617-1042
Fax: (920) 617-1100
www.rice-inc.com

Florida Firm No: F-01000005061
Certificate of Authorization: #9090
Wayne K. Helmila
Registration No: 59092

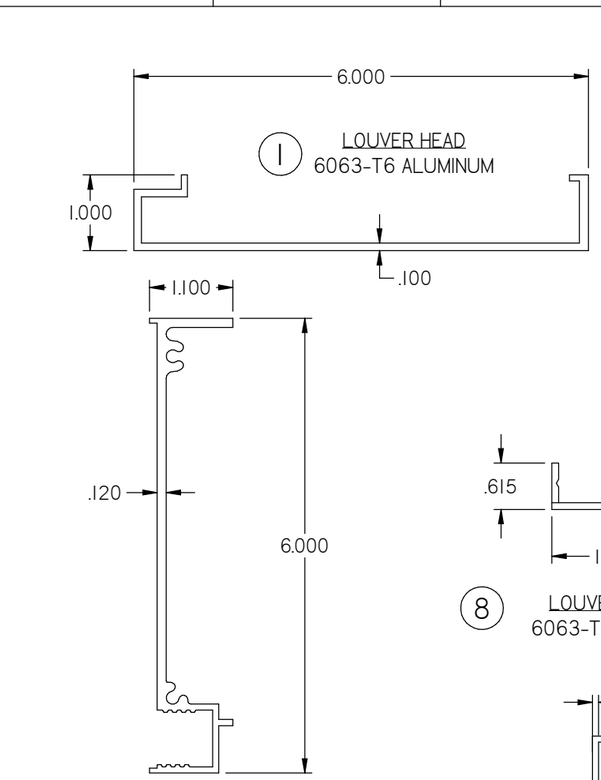

1 LOUVER HEAD
6063-T6 ALUMINUM

3 LOUVER JAMB
6063-T6 ALUMINUM

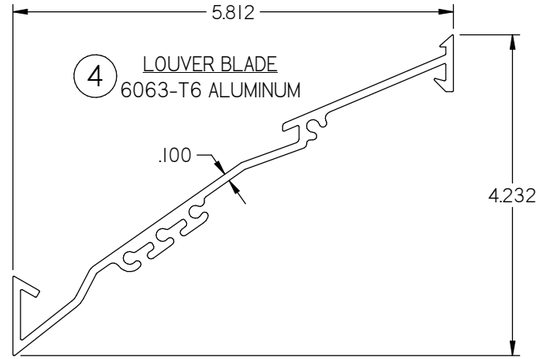

4 LOUVER BLADE
6063-T6 ALUMINUM

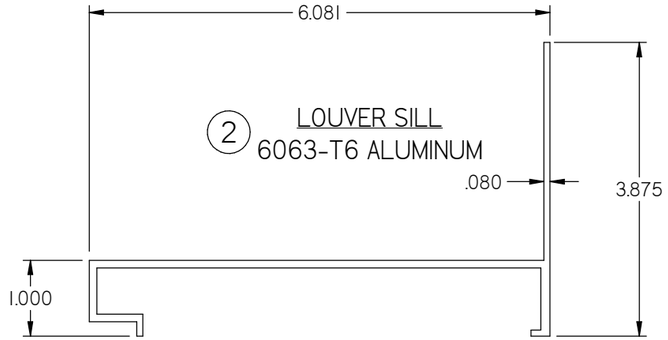

2 LOUVER SILL
6063-T6 ALUMINUM

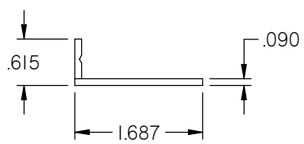

8 LOUVER FLANGE
6063-T6 ALUMINUM

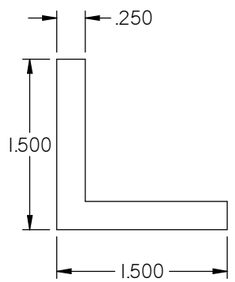

11 LOUVER SLEEVE MOUNT ANGLE
6063-T6 ALUMINUM

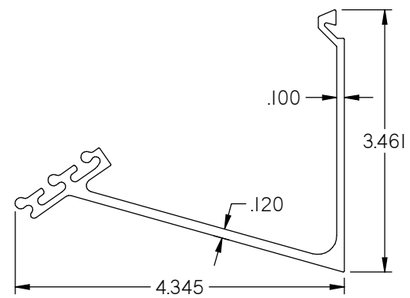

6 LOUVER BLADE BRACE
6063-T6 ALUMINUM

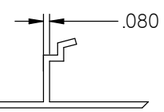

7 MULLION COVER
6063-T6 ALUMINUM

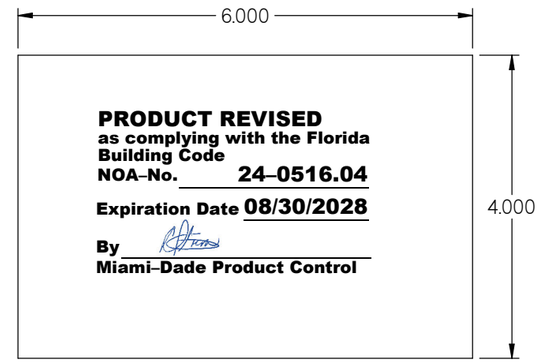

PRODUCT REVISED
as complying with the Florida Building Code
NOA-No. 24-0516.04
Expiration Date 08/30/2028
By
Miami-Dade Product Control

14 ALUMNUM SUPPORT SHIM
1/4"THICK
5052-H32 ALUMINUM

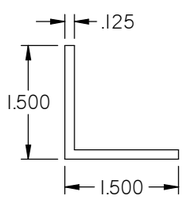

9A LOUVER SLEEVE
ATTACHMENT ANGLE CONT.
6063-T6 ALUMINUM

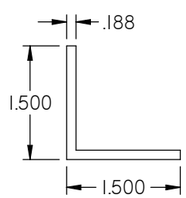

9C LOUVER SLEEVE
ATTACHMENT ANGLE CONT.
6061-T6 ALUMINUM

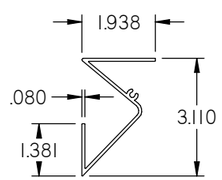

5 DRAIN HEAD
6063-T6 ALUMINUM

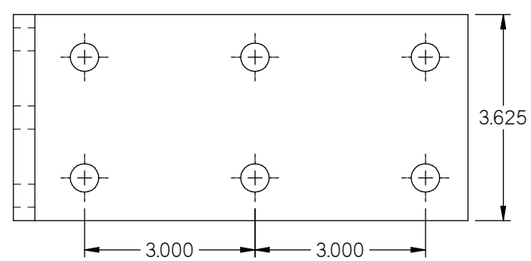

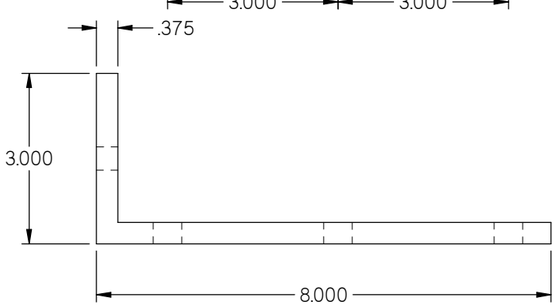

12B MULLION MOUNTING ANGLE
3.00 X 8.00X 0.375 X 3.625 LONG
6061-T6 ALUM. ANGLE
FOR 1/2 " DIA SS. LAG SCREW

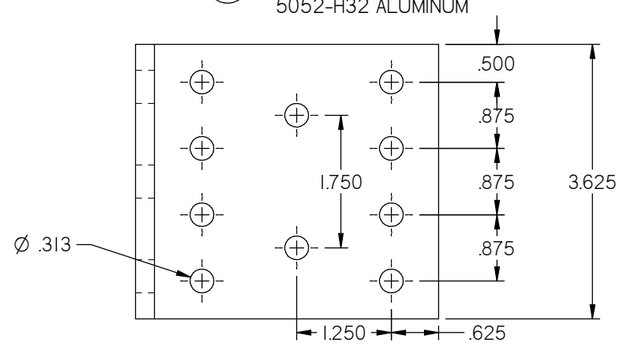

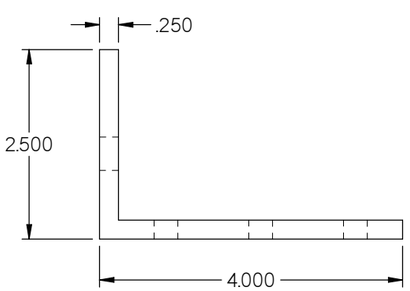

12A MULLION MOUNTING ANGLE
4.00 X 2.50 X 0.25 X 3.625 LONG
6061-T6 ALUM. ANGLE

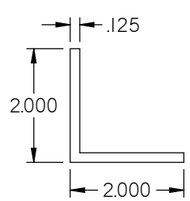

9B LOUVER SLEEVE
ATTACHMENT ANGLE CONT.
6063-T6 ALUMINUM

DWN BY: fcortinas
CHK BY: BDennis
DATE: 11/29/2021
SCALE: NTS
SHEET: 19 OF 27
REV B
DWG. NO. 1606DHPM

Nailor Industries Inc.
4714 Winfield Road Houston, TX 77039
TEL: 281-590-1172 FAX: 281-590-3086
www.nailor.com

TITLE: 1606DHPM LOUVER, W/ AND W/O DAMPER SLEEVE/CONTINUOUS MOUNT PART PROFILES

WAYNE K. HELMILA
LICENSE
No. 59092
STATE OF FLORIDA
PROFESSIONAL ENGINEER

07/23/2024
COA: 9090

RICE
ENGINEERING
105 School Creek Trail
Luxemburg, WI 54217
Phone: (920) 617-1042
Fax: (920) 617-1100
www.rice-inc.com

Florida Firm No: F-01000005061
Certificate of Authorization: #9090
Wayne K. Helmila
Registration No: 59092

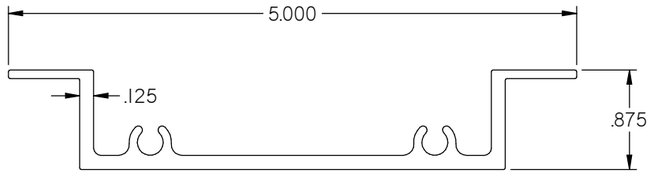

(17) DAMPER HEAD/SILL
6063-T6 ALUMINUM

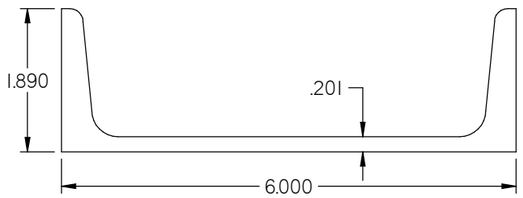

(27) LOUVER BRACE
SUPPORT CHANNEL
C6X8.2 ASTM A36 STEEL CHANNEL

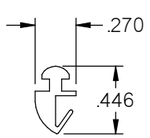

(20) DAMPER BLADE SEAL
MATERIAL VARIES

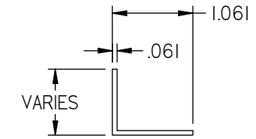

(21) DAMPER TOP/BOTTOM
CLOSUER
ALUMINUM

(22) DAMPER BUSHING
MATERIAL VARIES

(23) DAMPER LINKAGE BAR
MATERIAL VARIES

(24) DAMPER JAMB SEAL
STAINLESS STEEL

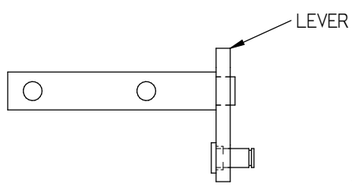

(25) NON DRIVE DAMPER AXEL ASM
MATERIAL VARIES

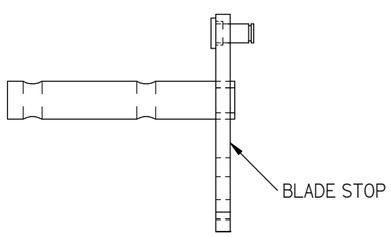

(26) DRIVE SIDE DAMPER AXLE ASM
MATERIAL VARIES

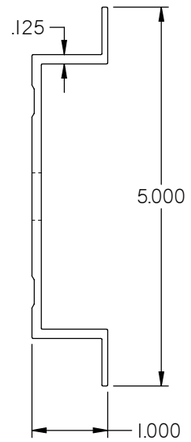

(18) DAMPER JAMB
6063-T6 ALUMINUM

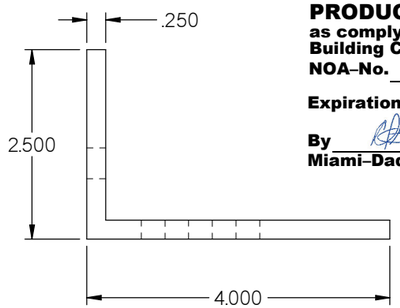

(13) SLEEVE ATTACHMENT ANGLE
4.00X 2.50 X 0.25 X 3.625 LONG
6061-T6 ALUM. ANGLE

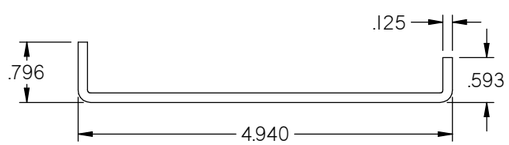

(15) MULLION STIFFNER ALUM.
6063-T6 ALUMINUM

(16) SLEEVE FORMED ALUM.
5052-H32 ALUMINUM

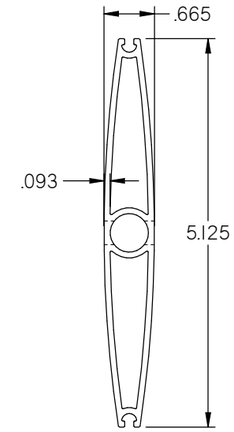

(19) DAMPER BLADE
6063-T6 ALUMINUM

PRODUCT REVISED
as complying with the Florida Building Code
NOA-No. 24-0516.04
Expiration Date 08/30/2028
By
Miami-Dade Product Control

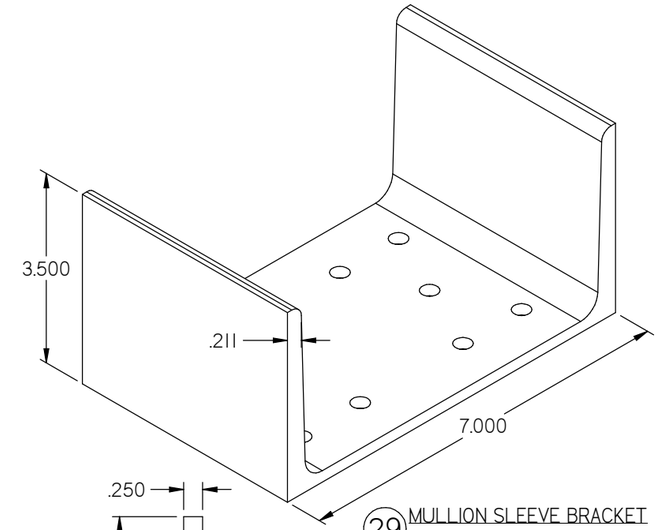

(29) MULLION SLEEVE BRACKET
6061-T6 ALUMINUM

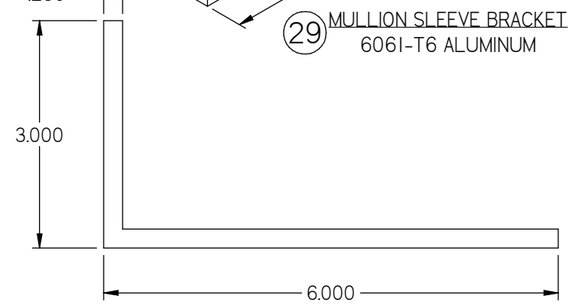

(10A) LOUVER SUPPORT ANGLE
6061-T6 ALUMINUM

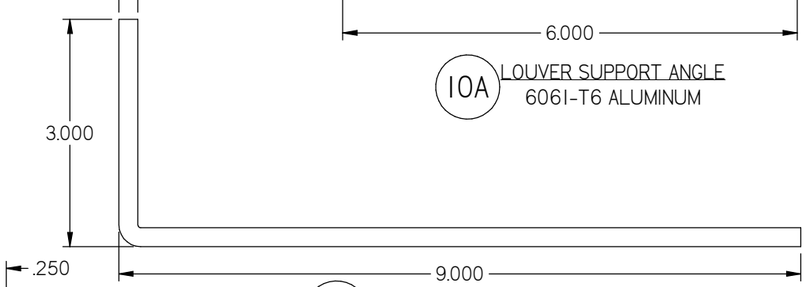

(10B) 9 X 3 X 1/4 ANGLE FORMED
6061-T6 ALUMINUM

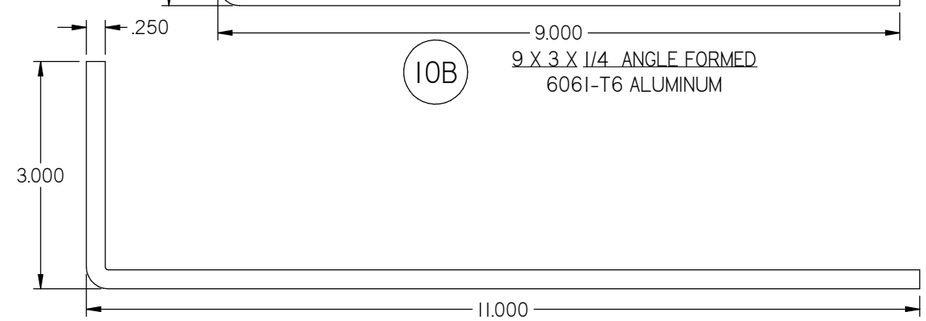

(10C) 11 X 3 X 1/4 ANGLE FORMED
6061-T6 ALUMINUM

REVISIONS:
REV B: ADDED 10A, 9X3 X .25 ANGLE
10B, 11X3X.25 ANGLE.

DWN BY: fcortinas | CHK BY: BDennis
DATE: 11/29/2021 | SCALE: NTS
SHEET: 20 OF 27
DWG. NO. 1606DHPM | REV B

Nailor Industries Inc.
4714 Winfield Road Houston, TX 77039
www.nailor.com TEL: 281-590-1172 FAX: 281-590-3086

TITLE: 1606DHPM LOUVER W/ AND W/O DAMPER SLEEVE/CONTINUOUS MOUNT PART PROFILES CONT.

WAYNE K. HELMILA
LICENSE
No. 59092
STATE OF FLORIDA
PROFESSIONAL ENGINEER

07/23/2024
COA: 9090

RICE
ENGINEERING
105 School Creek Trail
Luxemburg, WI 54217
Phone: (920) 617-1042
Fax: (920) 617-1100
www.rice-inc.com

Florida Firm No: F-01000005061
Certificate of Authorization: #9090
Wayne K. Helmila
Registration No: 59092

30A

MULLION MOUNTING BRACKET
FOR MULLION ANGLE BACK OF WALL MOUNT
ASTM A36

L8X6X7/16 AT 16" LONG
STEEL (A36)

1/2" DIA S.S. 316 HILTI KWIK HUS-EZ

USE (6) 1/2" DIA. S.S. 316 HILTI KWIK HUS-EZ
3" EMBEDMENT
6.5" SPACING (HORIZ.) / 3" SPACING (VERT.)
3" MIN. EDGE DISTANCE
4" MIN END DISTANCE
SPACING AS SHOWN
ASSUME FC'= 4000 PSI CRACKED CONCRETE

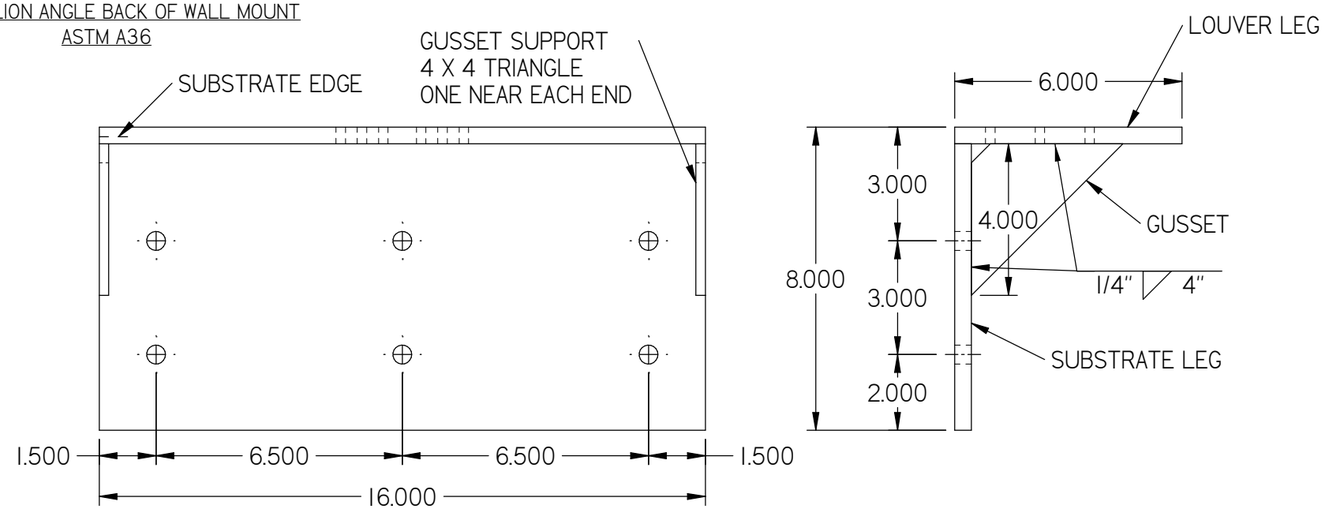

THESE MOUNTING BRACKETS ARE
FOR DETAILS 12B-12/27,
20A-18/27, 20B-18/27, AND
20C-18/27
(CONCRETE AND WOOD)

PRODUCT REVISED
as complying with the Florida Building Code
NOA-No. 24-0516.04
Expiration Date 08/30/2028
By
Miami-Dade Product Control

1/4" DIA LAG SCREWS ANCHORS:

USE (8) 1/4"DIA. X 6" LONG
STANDARD HEX S.S. SERIES 300
LAG SCREW
3-9/32" FULL THREAD ENGAGMENT
1-1/2" MIN. EDGE/END DISTANCE
SPACING AS SHOWN
ASSUME: SPRUCE/PINE/FIR, SG=0.42

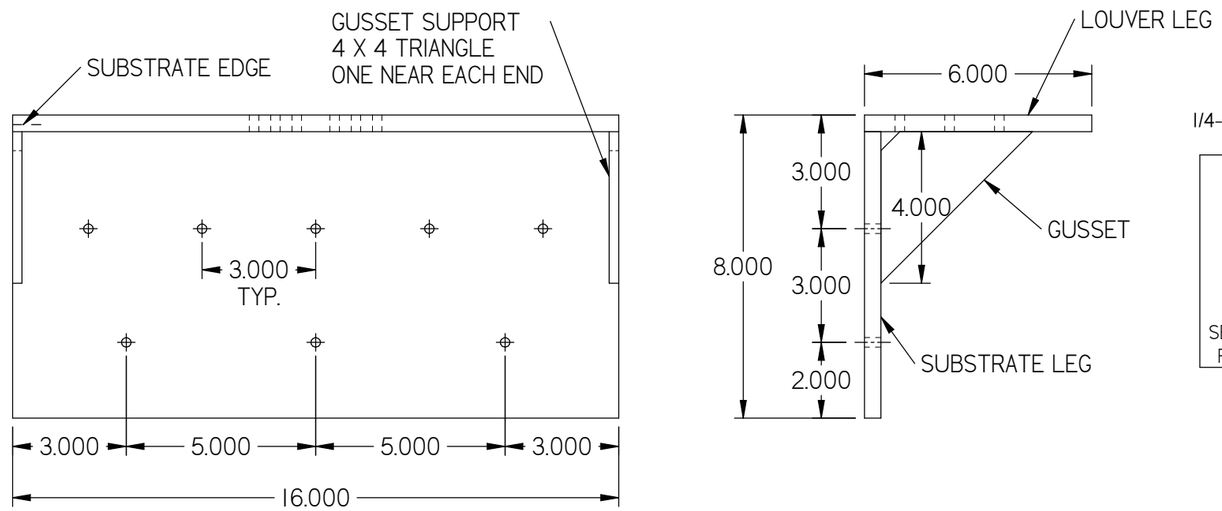

1/4-20 DIA. S.S ELCO BI-FLEX AND DRIL-FLEX ANCHORS:

USE (8) 1/4" DIA. S.S. SERIES 300
ELCO BI-FLEX OR
ELCO DRIL-FLEX FASTENERS
FULL THREAD ENGAGEMENT
1" MIN. EDGE/END DISTANCE
SPACING AS SHOWN
ASSUME: 1/4" STEEL (A-36)
SEAL DRIL-FLEX FASTENERS WITH LIQUID PROSOCO
FLASHING IF EXPOSED TO EXTERIOR CONDITIONS.

3/8" DIA. LAG SCREWS ANCHORS:

USE (6) 3/8" DIA. X 6" LONG
STANDARD HEX S.S. SERIES 300
LAG SCREW
3-9/32"FULL THREAD ENGAGMENT
1-1/2" MIN. EDGE/END DISTANCE
SPACING AS SHOWN
ASSUME: SPRUCE / PINE / FIR, SG= 0.42

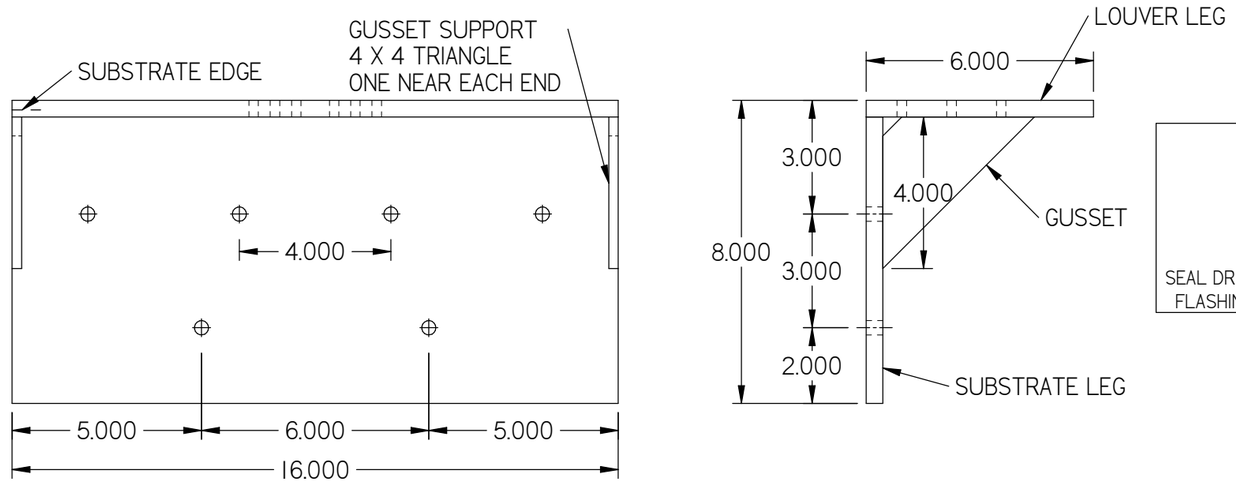

5/16-24 DIA. DRIL-FLEX ANCHORS

USE (6) 5/16" DIA.
S.S. ELCO DRIL-FLEX FASTENERS
FULL THREAD ENGAGMENT
1" MIN. EDGE/END DISTANCE
SPACING AS SHOWN
ASSUME: 1/4" STEEL (A36)
SEAL DRIL-FLEX FASTENERS WITH LIQUID PROSOCO
FLASHING IF EXPOSED TO EXTERIOR CONDITIONS

REVISIONS:
REV B: UPDATED 16" MULLION BRACKET

DWN BY: fcortinas
CHK BY: BDennis
DATE: 11/29/2021
SCALE: NTS
SHEET: 21 OF 27
REV B
DWG. NO. 1606DHPM

Nailor Industries Inc.
4714 Winfield Road Houston, TX 77039
TEL: 281-590-1172 FAX: 281-590-3086
www.nailor.com

TITLE: 16" MULLION ANGLES BACK OF THE WALL MOUNT

WAYNE K. HELMILA
LICENSE
No. 59092
STATE OF FLORIDA
PROFESSIONAL ENGINEER

07/23/2024
COA: 9090

RICE
ENGINEERING
105 School Creek Trail
Luxemburg, WI 54217
Phone: (920) 617-1042
Fax: (920) 617-1100
www.rice-inc.com

Florida Firm No: F-01000005061
Certificate of Authorization: #9090
Wayne K. Helmila
Registration No: 59092

30B

MULLION MOUNTING BRACKET
FOR MULLION ANGLE BACK OF WALL MOUNT
ASTM A36

1/2" DIA S.S. SERIES 300 HILTI KWIK BOLT EZ

USE (8) 1/2" DIA. S.S. SERIES 300 HILTI KWIK BOLT-EZ
4-1/4" EMBEDMENT
5" SPACING (HORIZ.) / 3" SPACING (VERT.)
3" MIN. EDGE DISTANCE
4" MIN END DISTANCE
SPACING AS SHOWN
ASSUME FC'= 4000 PSI CRACKED CONCRETE

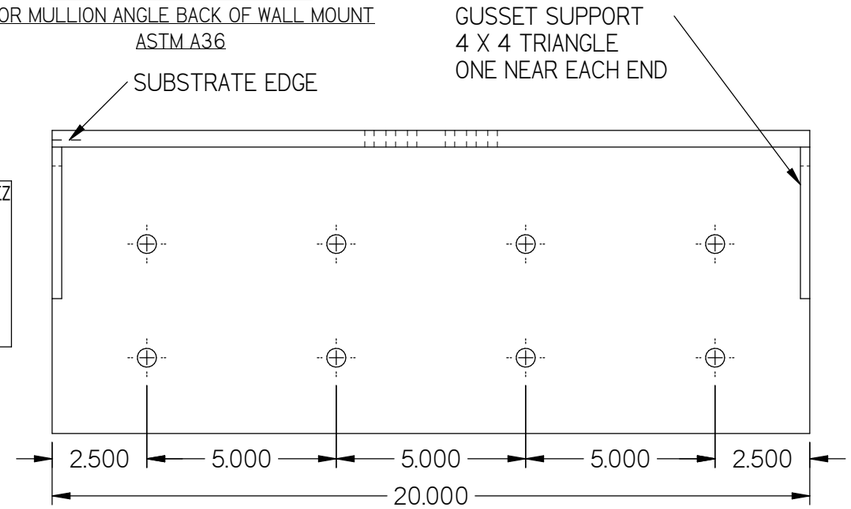

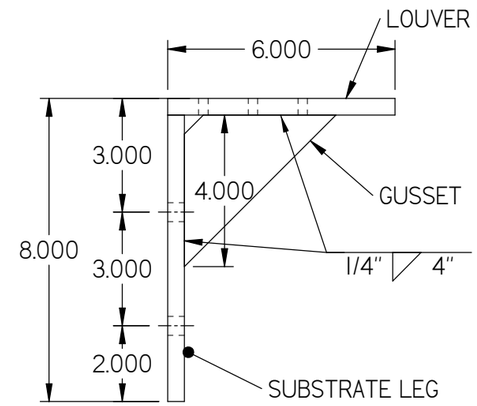

L8X6X7/16 AT 20" LONG
STEEL (A36)

THESE MOUNTING BRACKETS ARE
FOR DETAILS 10A-10/27
(CONCRETE AND WOOD)

PRODUCT REVISED
as complying with the Florida Building Code
NOA-No. 24-0516.04
Expiration Date 08/30/2028
By
Miami-Dade Product Control

1/4" DIA LAG SCREWS ANCHORS

USE (10) 1/4"DIA. X 6" LONG
STANDARD HEX S.S. SERIES 300
LAG SCREW
3-11/32" FULL THREAD ENGAGMENT
1" MIN. EDGE/END DISTANCE
SPACING AS SHOWN
ASSUME: SPRUCE/PINE/FIR, SG=0.42

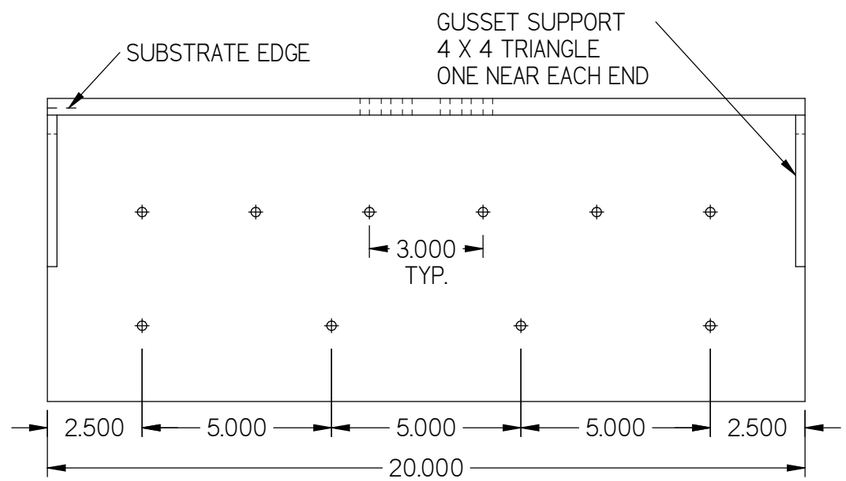

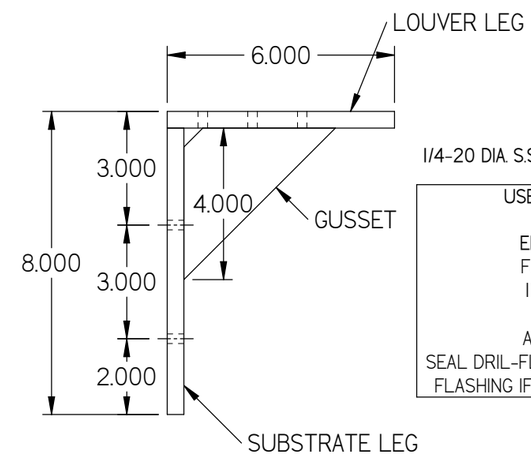

1/4-20 DIA. S.S. ELCO BI-FLEX AND DRIL-FLEX ANCHOR

USE (10) 1/4" DIA. S.S. SERIES 300
ELCO BI-FLEX OR
ELCO DRIL-FLEX FASTENERS
FULL THREAD ENGAGEMENT
1" MIN. EDGE/END DISTANCE
SPACING AS SHOWN
ASSUME: 1/4" STEEL (A-36)
SEAL DRIL-FLEX FASTENERS WITH LIQUID PROSOCO
FLASHING IF EXPOSED TO EXTERIOR CONDITIONS.

3/8" DIA. LAG SCREWS ANCHORS

USE (8) 3/8" DIA. X 6" LONG
STANDARD HEX S.S. SERIES 300
LAG SCREW
3-9/32"FULL THREAD ENGAGMENT
1-1/2" MIN. EDGE/END DISTANCE
SPACING AS SHOWN
ASSUME: SPRUCE / PINE / FIR, SG= 0.42

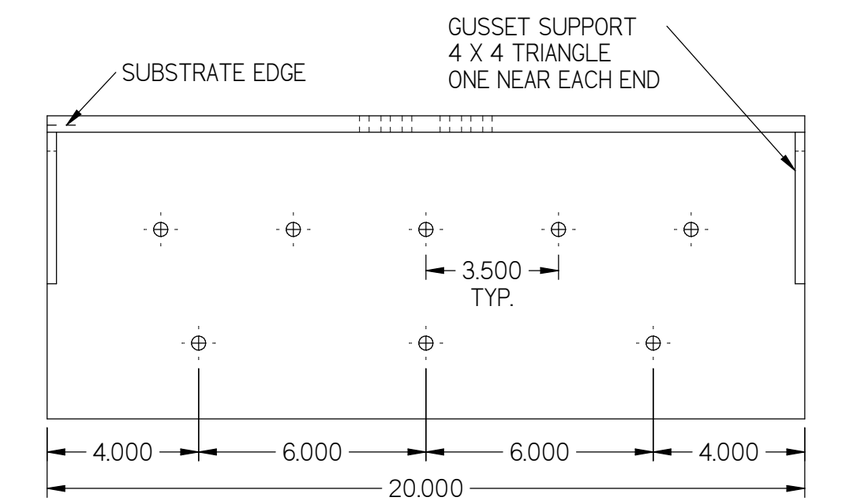

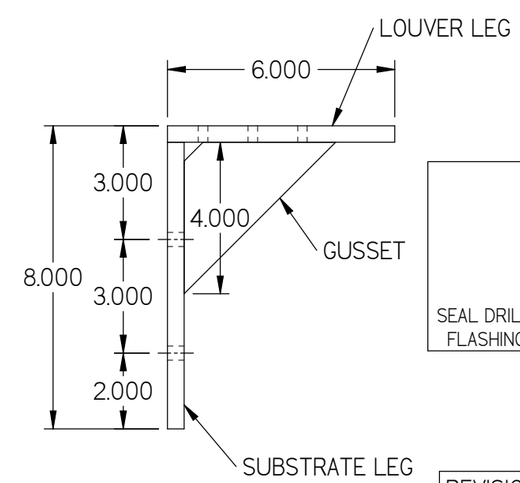

5/16-24 DIA. DRIL-FLEX ANCHOR

USE (8) 5/16" DIA.
ELCO DRIL-FLEX FASTENERS
FULL THREAD ENGAGMENT
1" MIN. EDGE/END DISTANCE
SPACING AS SHOWN
ASSUME: 1/4" STEEL (A36)
SEAL DRIL-FLEX FASTENERS WITH LIQUID PROSOCO
FLASHING IF EXPOSED TO EXTERIOR CONDITIONS

REVISIONS:
REV B: ADDED 20" MULLION BRACKET

DWN BY: fcortinas
CHK BY: BDennis
DATE: 11/29/2021
SCALE: NTS
SHEET: 22 OF 27
REV B
DWG. NO. 1606DHPM

Nailor Industries Inc.
4714 Winfield Road Houston, TX 77039
TEL: 281-590-1172 FAX: 281-590-3086
www.nailor.com

TITLE: 20" MULLION ANGLES BACK OF THE WALL MOUNT

WAYNE K. HELMILA
LICENSE
No. 59092
STATE OF FLORIDA
PROFESSIONAL ENGINEER

07/23/2024
COA: 9090

RICE
ENGINEERING
105 School Creek Trail
Luxemburg, WI 54217
Phone: (920) 617-1042
Fax: (920) 617-1100
www.rice-inc.com

Florida Firm No: F-01000005061
Certificate of Authorization: #9090
Wayne K. Helmila
Registration No: 59092

30C

MULLION MOUNTING BRACKET
FOR MULLION ANGLE BACK OF WALL MOUNT
ASTM A36

USE 16" X 6" X 1/2" STEEL PLATE ANGLE
AT 30" LONG AS SHOWN (A36 OR BETTER)
WELD 1/2" STEEL PLATE ANGLE TOGETHER WITH FULL PENETRATION BEVEL GROOVE WELD.
(2) 1/4" X 4" GUSSET PLATES AT 12" LONG WELDED TO EACH END
WELD 1/4" GUSSET PLATES WITH FILLET WELDS.

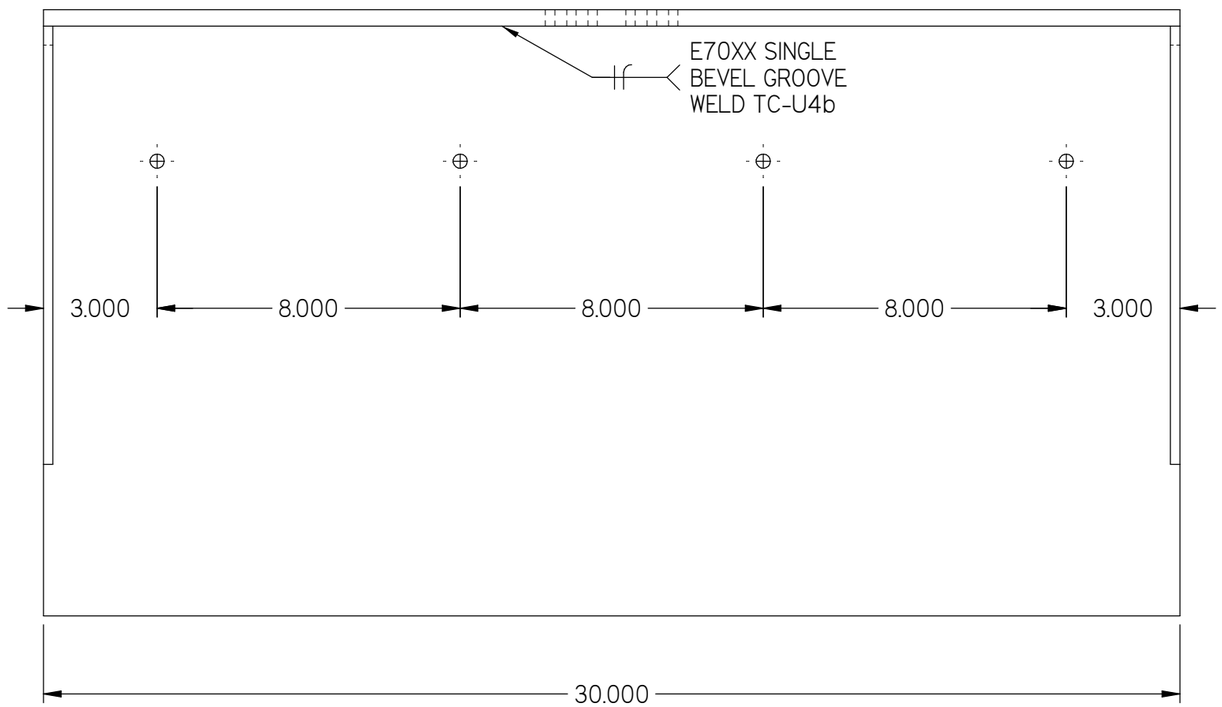

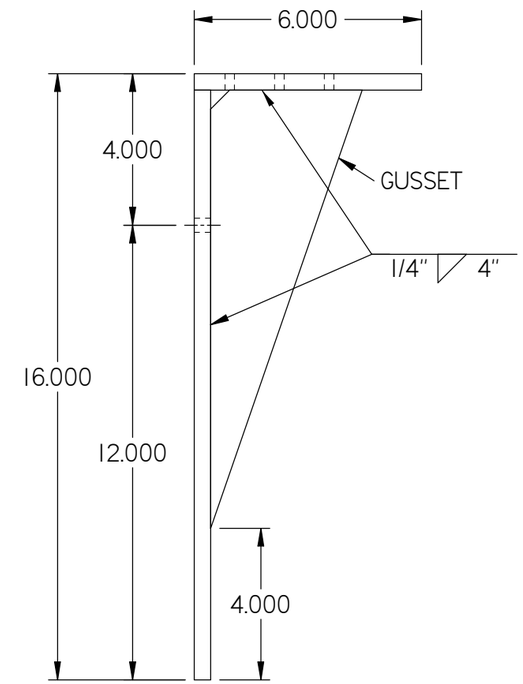

USE (4) 1/2" DIA. HILTI KWIK HUZ-EZ SCREW ANCHORS
4-1/4" EMBEDMENT
8" SPACING AS SHOWN. LOCATE (1) FASTENER IN THE CENTER OF EACH MASONRY CELL. BRACKET CAN BE INSTALL 4" LEFT OR RIGHT OF MULLION CENTERLINE SO ANCHORS CAN BE INSTALLED AT CENTER OF MASONRY CELLS.
4" MIN. EDGE DISTANCE
4" MIN END DISTANCE
ASSUME GROUT FILLED MASONRY FM'= 2000 PSI (DESIGNED BY OTHERS)
SEAL FASTENERS WITH LIQUID PROSOCO FLASHING AT EXTERIOR CONDITIONS.

THESE MOUNTING BRACKETS ARE FOR DETAILS 10A-10/27, 12B-12/27, 20A-18/27/, 20B-18/27, AND 20C-18/27 (GROUT FILLED CMU)

PRODUCT REVISED
as complying with the Florida Building Code
NOA-No. 24-0516.04
Expiration Date 08/30/2028
By
Miami-Dade Product Control

REVISIONS:
REV B: ADDEDD 30" MULLION BRACKET

DWN BY: fcortinas
CHK BY: BDennis
DATE: 11/29/2021
SCALE: NTS
SHEET: 23 OF 27
REV B
DWG. NO. 1606DHPM

Nailor Industries Inc.
4714 Winfield Road Houston, TX 77039
www.nailor.com TEL: 281-590-1172 FAX: 281-590-3086

TITLE: 30" CMU MULLION ANGLES BACK OF THE WALL MOUNT

WAYNE K. HELMILA
LICENSE
No. 59092
STATE OF FLORIDA
PROFESSIONAL ENGINEER

07/23/2024
COA: 9090

RICE
ENGINEERING
105 School Creek Trail
Luxemburg, WI 54217
Phone: (920) 617-1042
Fax: (920) 617-1100
www.rice-inc.com

Florida Firm No: F-01000005061
Certificate of Authorization: #9090
Wayne K. Helmila
Registration No: 59092

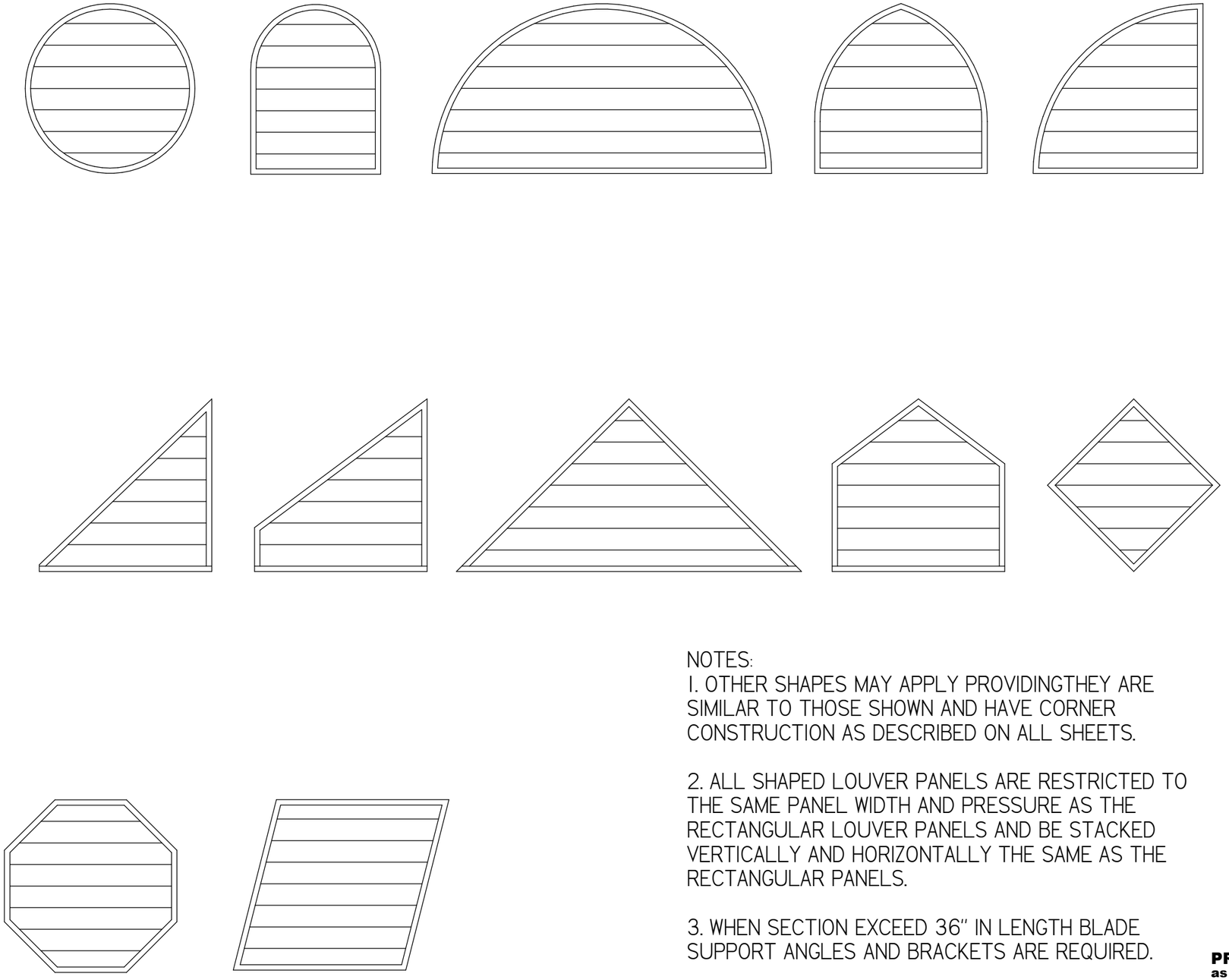

NOTES:

1. OTHER SHAPES MAY APPLY PROVIDINGTHEY ARE SIMILAR TO THOSE SHOWN AND HAVE CORNER CONSTRUCTION AS DESCRIBED ON ALL SHEETS.

2. ALL SHAPED LOUVER PANELS ARE RESTRICTED TO THE SAME PANEL WIDTH AND PRESSURE AS THE RECTANGULAR LOUVER PANELS AND BE STACKED VERTICALLY AND HORIZONTALLY THE SAME AS THE RECTANGULAR PANELS.

3. WHEN SECTION EXCEED 36" IN LENGTH BLADE SUPPORT ANGLES AND BRACKETS ARE REQUIRED.

4. USE CONTIUOUS ANGLES TO ANCHOR OTHER LOUVER SHAPES TO BUILDING SUBSTRATE. SEE ANCHOR SCHEDULE FOR SUBSTRATE-SPECIFIC LIMITATIONS.

PRODUCT REVISED
as complying with the Florida Building Code
NOA-No. 24-0516.04
Expiration Date 08/30/2028
By
Miami-Dade Product Control

DWN BY: fcortinas
CHK BY: BDennis
DATE: 11/29/2021
SCALE: NTS
SHEET: 24 OF 27
REV B
DWG. NO. 1606DHPM

Nailor Industries Inc.
4714 Winfield Road Houston, TX 77039
www.nailor.com TEL: 281-590-1172 FAX: 281-590-3086

TITLE:
1606DHPM LOUVER
W/ AND W/O DAMPER
AVAILABLE SHAPES

WAYNE K. HELMILA
LICENSE
No. 59092
STATE OF
FLORIDA
PROFESSIONAL ENGINEER

07/23/2024
COA: 9090

RICE
ENGINEERING
105 School Creek Trail
Luxemburg, WI 54217
Phone: (920) 617-1042
Fax: (920) 617-1100
www.rice-inc.com

Florida Firm No: F-01000005061
Certificate of Authorization: #9090
Wayne K. Helmila
Registration No: 59092

BILL OF MATERIALS

ITEM	DESCRIPTION	MATERIAL	NOTES
1	C6-139 LOUVER HEAD	6063-T6 ALUMINIUM	
2	C6-140 LOUVER SILL	6063-T6 ALUMINIUM	
3	C6-141 LOUVER JAMB	6063-T6 ALUMINIUM	
4	C6-142 LOUVER BLADE	6063-T6 ALUMINIUM	
5	C6-168 LOUVER DRAIN	6063-T6 ALUMINIUM	
6	C6-143 LOUVER BLADE BRACE	6063-T6 ALUMINIUM	
7	C6-104 MULLION COVER	6063-T6 ALUMINIUM	
8	C6-096 LOUVER FLANGE	6063-T6 ALUMINIUM	
9A	C6-176 1 1/2 X 1 1/2 X 1/8 ANGLE CONT.	6063-T6 ALUMINIUM	USED AT HEAD/SILL/JAMB, OF LOUVER AND SLEEVE
9B	C6-160 2 X 2 X 1/8 ANGLE CONT.	6063-T6 ALUMINIUM	USE AS ATTACHMENT ANGLE
9C	1 1/2 X 1 1/2 X 3/16 ANGLE CONT.	6063-T6 ALUMINIUM	USE AS ATTACHMENT ANGLE
10A	C6-161B 6 X 3 X 1/4 ANGLE	6061-T6 ALUMINIUM	USED AT BLADE SUPPORT AND JAMB SUPPORT
10B	9 X3 X 1/4 ANGLE	6061-T6 ALUMINIUM	FORMED ALUM ANGLE
10C	11/ X 3 X 1/4 ANGLE	6061-T6 ALUMINIUM	FORMED ALUM ANGLE
11	1 1/2 X 1 1/2 X 1/4 ANGLE	6063-T6 ALUMINIUM	USED AT HEAD/SLILL/JAMB OF SLEEVE
12A	4 X 2.50 X 1/4 X 3 5/8 LONG ANGLE	6063-T6 ALUMINIUM	USED AT HEAD/ SILL OF MULLION ATTACHMENT
12B	8 X 3 X 3-5/8 LONG ANGLE	6063-T6 ALUMINIUM	USED AT HEAD/ SILL OF MULLION ATTACHMENT W/ 1/2" LAG
13	4 X 2.50 X 1/4 3 5/8 LONG ANGLE	6061-T6 ALUMINIUM	USED AT HEAD/ SILL OF LOUVER SLEEVE ATTACHMENT
14	6 X 4 X 1/4 ALUMININM SUPPORT SHIM	6063-T6 ALUMINIUM	USED AT SILL FOR SUPPORT ANGLE
15	MULLION STIFFENER ALUM	6063-T6 ALUMINIUM	1/8 FORMED ALUM CHANNEL USED AT MULLION
16	FORMED SLEEVE 1/8 THK	5052-H32 ALUMINIUM	1/8 FORMED SLEEVE - DEPTH VARIES
17	B2-610 DAMPER HEAD/SILL	6063-T6 ALUMINIUM	
18	B2-609 DAMPER JAMB	6063-T6 ALUMINIUM	
19	B2-527 DAMPER BLADE	6063-T6 ALUMINIUM	
20	DAMPER BLADE SEAL	SILICONE / RUBBER TYPE	MATERIAL VARIES
21	DAMPER TOP/BOTTOM CLOSURE	ALUMINIUM	
22	DAMPER BUSHING	BRONZE / SS	
23	DAMPER LINKAGE BAR	SS	
24	DAMPER JAMB SEAL	SS	
25	NON DRIVE DAMPER AXEL ASM	SS	
26	DRIVE SIDE DAMPER AXEL ASM	SS	
27	C6 X 8.2 STEEL CHANNEL	ASTM A36	USED AT BLADE BLACE & MULLION
29	7" X 21" ALUMINIUM SLEEVE BRACKET	6061-T6	MULLION SLEEVE BRACKET
30	MULLION MOUNTING ANGLE BRACKET	ASTM A36	MULLION MOUNTING
31	C6-180	SCREW,MTL,10-24X1,HEX	
32	C6-181	1/4 NYLON INSERT LOCKNUT	
33	C6-182	1/4-20x2-1/2 HEX CAP SCREW	
34	C6-183	WASHER,BONDED,10X1/2,SS	300 SERIES, SS COND. CW FY = 65 KSI
35	C6-184	SCREW,MTL,12-24-1-1/4,HEX	300 SERIES, SS COND. CW FY = 65 KSI
36	C6-185	1/4-20x1 HEX SCREW	300 SERIES, SS COND. CW FY = 65 KSI
37	C6-186	1/4 COMM'L FLAT WASHER	300 SERIES, SS COND. CW FY = 65 KSI
38	C6-187	1/4-20x1 HEX CAP SCREW 18-8 SS	
39	C6-188	SCREW, MTL,HEX, 8-32 X 1,	300 SERIES, SS COND. CW FY = 65 KSI
40	C6-189	SCREW, METAL, HW, 10-24 X 1-1/2,	300 SERIES, SS COND. CW FY = 65 KSI
41	C6-192	SCREW, MTL, HEX, 8 X 1-1/2,	300 SERIES, SS COND. CW FY = 65 KSI
42	C6-193	SCREW, METAL, HEX, 1/4-20 X 1-1/2	300 SERIES, SS COND. CW FY = 65 KSI
43	C6-194	SCREW, METAL, HEX, 12 X 1-1/2, SS	300 SERIES, SS COND. CW FY = 65 KSI
44	C6-195	1/4-20 X 1 1/4 HEX CAP SCREW 18-8 S/S	
45	C6-196	1/4-20 FIN. HEX NUT 18-8 S/S	
46	C6-197	1/4 LOCKWASHER 18-8 S/S	
47	C6-198	SCREW, MTL, HEX, 8 X 3/4,	300 SERIES, SS COND. CW FY = 65 KSI
48		3/8"-16 X 2 18-6 HEX HEAD BOLT SS	300 SERIES, SS COND. CW FY = 65 KSI
49		3/8-16 HEX LOCK NUT SS	300 SERIES, SS COND. CW FY = 65 KSI
50		3/8-FLAT WASHER SS	300 SERIES, SS COND. CW FY = 65 KSI

PRODUCT REVISED
as complying with the Florida Building Code
NOA-No. 24-0516.04
Expiration Date 08/30/2028
By
Miami-Dade Product Control

REVISIONS:
REV B: UPDATED BILL OF MATERIAL

DWN BY: fcortinas
CHK BY: BDennis
DATE: 11/29/2021
SCALE: NTS
SHEET: 25 OF 27
REV B
DWG. NO. 1606DHPM

Nailor Industries Inc.
4714 Winfield Road Houston, TX 77039
www.nailor.com TEL: 281-590-1172 FAX: 281-590-3086

TITLE: 1606DHPM LOUVER W/ AND W/O DAMPER SLEEVE / CONTINUOUS MOUNT BILL OF MATERIAL

WAYNE K. HELMILA
LICENSE
No. 59092
STATE OF FLORIDA
PROFESSIONAL ENGINEER

07/23/2024
COA: 9090

RICE
ENGINEERING
105 School Creek Trail
Luxemburg, WI 54217
Phone: (920) 617-1042
Fax: (920) 617-1100
www.rice-inc.com

Florida Firm No: F-01000005061
Certificate of Authorization: #9090
Wayne K. Helmila
Registration No: 59092

*EMBEDMENT DEPTH IS EQUAL TO OVERALL LENGTH FOR CONCRETE /CMU FASTENERS. IF SHIMS ARE USED, FASTENER LENGTH MUST BE INCREASED BY THICKNESSOF SHIMS

LOUVER MODEL 1606DHPM FASTENER TABLES

JAMB ANGLE MOUNT FASTENER, WIDTH <= 72 INCHES (TABLE 1)

WOOD	STEEL STUD	STEEL	CONRETE	CMU	MIN.	FASTENER TYPE	DIAMETER	# Rqd	CENTERS	EDGE	END	EMBEDMENT
X					SG 0.42	LAG SCREW (300 SERIES SS- COND. CW- Fy = 65ksi)	1/4"	1	3"	2"		2"
X					SG 0.42	LAG SCREW (300 SERIES SS- COND. CW- Fy = 65ksi)	3/8"	1	5"	2"		2"
	X				16 Ga.	ELCO BI-FLEX DRILLING SCREWS (300 SERIES SS- COND. CW- Fy= 65ksi)	1/4"	1	4-1/2"	2"		3 THREAD BEYOND SUBSTRATE
		X			A-36	ELCO BI-FLEX DRILLING SCREWS (300 SERIES SS- COND. CW- Fy= 65ksi)	1/4"	1	13-1/2"	2"		1/4"
		X			A-36	ELCO DRILL-FLEX DRILLING SCREWS (COND. CW- Fy= 65ksi) SEALED w/ PROSOCO SEALANT	5/16"	1	20"	2"		1/4"
			X-CRACKED 6" DEEP		4ksi	HILTI KWIK HUS-EZ SS316 ANCHOR	1/4"	1	7"	4"		2"
			X-CRACKED 6" DEEP		4ksi	HILTI KWIK HUS-EZ SS316 ANCHOR	3/8"	1	12"	4"		2"
				X	2ksi	HILTI KWIK HUS-EZ SS316 ANCHOR	3/8"	1	12"	4"		3-1/4"
				X	2ksi	DEWALT GALVANIZED SCREW-BOLT+ ANCHOR	3/8"	1	4.-1/2"	1-1/2"	1-1/2"	3-1/4"

MULLION ANGLE MOUNT FASTENERS, HEIGHT<= 120 INCHES (TABLE 2)

WOOD	STEEL STUD	STEEL	CONRETE	CMU	MIN.	FASTENER TYPE	DIAMETER	# Rqd / CLIP	CENTERS	EDGE	END	EMBEDMENT
X					SG 0.42	LAG SCREW (300 SERIES SS- COND. CW- Fy = 65ksi)	1/4"	10	1-1/4 X 7/8	2"		2-5/8 "
X					SG 0.42	LAG SCREW (300 SERIES SS- COND. CW- Fy = 65ksi)	3/8"	6	2-1/8 X 3	2"		1-5/8"
		X			A-36	ELCO BI-FLEX DRILLING SCREWS (300 SERIES SS- COND. CW- Fy= 65ksi)	1/4"	4	2-1/2"X 2-5/8"	2"		1/4"
		X			A-36	ELCO DRILL-FLEX DRILLING SCREWS (COND. CW- Fy= 65ksi) SEALED w/ PROSOCO SEALANT	5/16"	4	2-1/2" X 2-5/8"	2"		1/4"

MULLION ANGLE MOUNT BACK OF WALL FASTENERS, HEIGHT <= 120 INCHES (TABLE 3)

WOOD	STEEL STUD	STEEL	CONRETE	CMU	MIN.	FASTENER TYPE	DIAMETER	# Rqd	CENTERS	EDGE	END	EMBEDMENT
X					SG 0.42	LAG SCREW (300 SERIES SS- COND. CW- Fy = 65ksi)	1/4"	8	VARIES	1"		3-11/32"
X					SG 0.42	LAG SCREW (300 SERIES SS- COND. CW- Fy = 65ksi)	1/4"	10	VARIES	1"		3-11/32"
X					SG 0.42	LAG SCREW (300 SERIES SS- COND. CW- Fy = 65ksi)	3/8"	6	VARIES	1-1/2"		3-9/32"
X					SG 0.42	LAG SCREW (300 SERIES SS- COND. CW- Fy = 65ksi)	3/8"	8	VARIES	1-1/2"		3-9/32"
		X			A-36	ELCO BI-FLEX DRILLING SCREWS (300 SERIES SS- COND. CW- Fy= 65ksi)	1/4"	8	VARIES	1"		FULL THREAD ENGAGEMENT
		X			A-36	ELCO BI-FLEX DRILLING SCREWS (300 SERIES SS- COND. CW- Fy= 65ksi)	1/4"	10	VARIES	1"		FULL THREAD ENGAGEMENT
		X			A-36	ELCO DRILL-FLEX DRILLING SCREWS (COND. CW- Fy= 65ksi) SEALED w/ PROSOCO SEALANT	5/16"	6	VARIES	1"		FULL THREAD ENGAGEMENT
		X			A-36	ELCO DRILL-FLEX DRILLING SCREWS (COND. CW- Fy= 65ksi) SEALED w/ PROSOCO SEALANT	5/16"	8	VARIES	1"		FULL THREAD ENGAGEMENT
			X-CRACKED 8" DEEP		4ksi	HILTI KWIK HUS-EZ SS316 **	1/2"	6	6-1/2 X 3	3"	4"	3"
			X-CRACKED 8" DEEP		4ksi	HILTI KWIK BOLT EZ SS 300 SERIES **	1/2"	8	5 X 3	3"	4"	4-1/4"
				X	2ksi	HILTI KWIK HUS-EZ SCREW ANCHORS - SEAL w/ LIQUID PROSOCO @ EXTERIOR CONDITIONS	1/2"	4	8"	4"	4"	4-1/4"

PRODUCT REVISED
as complying with the Florida Building Code
NOA-No. 24-0516.04
Expiration Date 08/30/2028
By
Miami-Dade Product Control

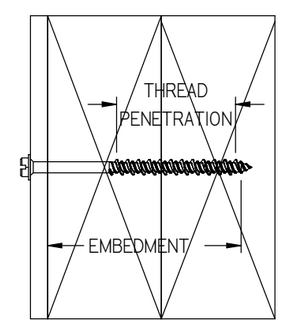

REVISIONS:
REV B: UPDATED FASTENER TABLES

DWN BY: fcortinas
CHK BY: BDennis
DATE: 11/29/2021
SCALE: NTS
SHEET: 26 OF 27
REV B
DWG. NO. 1606DHPM

Nailor Industries Inc.
4714 Winfield Road Houston, TX 77039
TEL: 281-590-1172 FAX: 281-590-3086
www.nailor.com

TITLE: 1606DHPM LOUVER W/ AND W/O DAMPER FASTENER TABLES

WAYNE K. HELMILA
LICENSE
No. 59092
STATE OF FLORIDA
PROFESSIONAL ENGINEER

08/14/2024
COA: 9090

RICE
ENGINEERING
105 School Creek Trail
Luxemburg, WI 54217
Phone: (920) 617-1042
Fax: (920) 617-1100
www.rice-inc.com

Florida Firm No: F-01000005061
Certificate of Authorization: #9090
Wayne K. Helmila
Registration No: 59092

GENERAL NOTES:

1. IT SHALL BE THE RESPONISBILITY OF THE ENGINEER OF RECORD TO VERIFY THE STRUCTURAL INTEGRITY OF THE EXISTING STRUCTURE TO SUPPORT THE LOADS IMPOSED BY THE LOUVER(S).
2. THE 1606DHPM WITH /WITHOUT DAMPER HAVE BEEN DESIGNED AND TESTED IN ACCORDANCE WITH THE FLORIDA BUILDING CODE (FBC) AND TEST PROTOCALS TAS 100(A) WIND DRIVEN RAIN, TAS-201 (IMPACT), TAS-202 (UNIFORM STATIC PRESSURE) , AND TAS-203 (CYCLIC FATIGUE).
3. MAXIMUM SINGLE SECTION SIZE IS 72" WIDE X 120" HIGH.
4. MAXIMUM ASSEMBLED LOUVER SIZE IS UNLIMITED WIDE X 120" HIGH.
5. SECTIONS OR ASSEMBLIES MAY BE STACKED VERTICALLY PROVIDING A SUITABLE STRUCTURAL SUPPORT IS DESIGNED AND INSTALLED BY OTHERS TO SUPPORT ALL LOADS TRANSFERRED FROM THE LOUVER.
6. CMU SHALL BE ASTM C90, TYPE II, 2,000 MIN PSI GROUT-FILLED, STEEL STUDS TO BE 16 G.A. FY=50ksi MIN.
7. THE SLEEVE MOUNT STYLE LOUVER UTILIZES AN ANCHORLESS INSTALLATION METHOD THAT DOES NOT REQUIRE THE USE OF FASTENERS INTO THE SUBSTRATE. IT MAY BE INSTALLED IN ANY SUBSTRATE THAT WILL WITHSTAND THE LOADS TRANSFERRED TO IT BY THE LOUVER. NAILOR IND. DOES NOT DETERMINE THE STRUCTURAL INTERGRITY OF THE SUBSTRATE STRUCTURE.
8. THE CONTINUOUS ANGLE MOUNT STYLE UTILIZES A CONTINUOUS JAMB ANGLETHAT IS ATTACHED TO THE SUBSTRATE BY FASTENERS. IT MAY BE INSTALLED IN CONCRETE, CMU, STEEL, OR WOOD ACCORDING TO THE FASTENER SCHEDULE. NAILOR IND. DOES NOT DETERMINE THE STRUCTRAL INTERGRITY OF THE SUBSTRATE STUCTURE.
9. LOUVER ASSEMBLY IS QUALIFIEDFOR A MAXIMUM DESIGN LOAD OF +/− 150 PSF.
10. LOUVER ASSEMBLY WITH AND WITHOUT DAMPER SHALL ONLY BE INSTALLED IN A LOCATION WHERE THE ROOM BEHIND THE LOUVER IS DESIGNED TO DRAIN WATER PENETRATING INTO THE ROOM AND THE ROOM WILL HOUSE WATER RESISTANT / WATER PROOF EQUIPMENT, COMPONENTS, AND / OR SUPPLIES.
11. INSTALLER TO PROVIDE SEPERATION OF DISSIMILAR MATERIALS AS REQUIRED.
12. THE 2020 DAMPER MAY BE OPERATIED BY A MANUAL QUADRANT OR BY AN ELECTRIC OR PNEUMATIC ACTUALTOR, THE DAMPER'S ACTUATOR IS NOT PART OF THIS APPROVAL, BUT SHALL BE CERTIFIED BY AN INDEPENDENT TESTING AGENCY.
13. FRAME CONSTRUCTION, HEAD AND SILL ARE SQUARE CUT, JAMBS ARE SQUARE CUT @ HEAD AND SILL. CORNERS ARE SECURED WITH (2) #10-24 x 1 1/2 HW, BLADES ARE SECURED TO JAMBS WITH (4) #10-24 X 1 1/2 HW, @ EACH END.
14. STEEL / STAINLESS-STEEL/ ALUMINIUM PARTS MAY BE MADE OUT OF ALTERNATE ALLOY THA HAS EQUAL OR GREATER YIELD STRENGTH.
15. BLADE SUPPORT ANGLE AND BLADE SUPPORT BRACE ONLY REQUIRED WHEN ACTUAL LOUVER SECTION WIDTH IS GREATER THAN 36 INCHES.
16. THREAD PENETRATION LENGTH SIGNIFIES THE REQUIRED LENGTH OF THE THREADED PORTION OF THE FASTENER INTO THE WOOD SUBSTRATE PROVIDING FULL CONTACT WITH WOOD. LAG SCREW TIP CANNOT BE CONSIDERED PART OF THE THREADED PORTION OF THE SCREW. LAG SCREWS ARE NOT TO BE INSTALLED AT WOOD JOINTS/SPLICES WHERE THE LAG SCREW COULD FALL BETWEEN MEMEBERS.

** NOTE ENGINEER OF RECORD (EOR) IS RESPONSIBLE FOR DETERMINING IF CONCRETE IS TO BE CONSIDERED CRACKED OR UNCRACKED.

PRODUCT REVISED
as complying with the Florida Building Code
NOA-No. 24-0516.04
Expiration Date 08/30/2028
By
Miami-Dade Product Control

REVISIONS:
REV B: ADDED GENERAL NOTES PAGE

DWN BY: fcortinas | CHK BY: BDennis
DATE: 11/29/2021 | SCALE: NTS
SHEET: 27 OF 27
DWG. NO. 1606DHPM
REV B

Nailor Industries Inc.
4714 Winfield Road Houston, TX 77039
www.nailor.com TEL: 281-590-1172 FAX: 281-590-3086

TITLE: 1606DHPM LOUVER W/ AND W/O DAMPER GENERAL NOTES

WAYNE K. HELMILA
LICENSE
No. 59092
STATE OF FLORIDA
PROFESSIONAL ENGINEER

07/23/2024
COA: 9090

RICE ENGINEERING
105 School Creek Trail
Luxemburg, WI 54217
Phone: (920) 617-1042
Fax: (920) 617-1100
www.rice-inc.com

Florida Firm No: F-01000005061
Certificate of Authorization: #9090
Wayne K. Helmila
Registration No: 59092