MIAMI-DADE COUNTY
PRODUCT CONTROL SECTION
11805 SW 26 Street, Room 208
Miami, Florida 33175-2474
T (786) 315-2590 F (786) 315-2599
www.miamidade.gov/building

DEPARTMENT OF REGULATORY AND ECONOMIC RESOURCES (RER)
BOARD AND CODE ADMINISTRATION DIVISION

NOTICE OF ACCEPTANCE (NOA)

Nailor Industries Inc.
4714 Winfield Road
Houston, TX 77039

SCOPE: This NOA is being issued under the applicable rules and regulations governing the use of construction materials. The documentation submitted has been reviewed and accepted by Miami-Dade County RER-Product Control Section to be used in Miami Dade County and other areas where allowed by the Authority Having Jurisdiction (AHJ).

This NOA shall not be valid after the expiration date stated below. The Miami-Dade County Product Control Section (In Miami Dade County) and/or the AHJ (in areas other than Miami Dade County) reserve the right to have this product or material tested for quality assurance purposes. If this product or material fails to perform in the accepted manner, the manufacturer will incur the expense of such testing and the AHJ may immediately revoke, modify, or suspend the use of such product or material within their jurisdiction. RER reserves the right to revoke this acceptance if it is determined by Miami-Dade County Product Control Section that this product or material fails to meet the requirements of the applicable building code.

This product is approved as described herein and has been designed to comply with the Florida Building Code, including the High Velocity Hurricane Zone.

DESCRIPTION: Model 1605WDM Aluminum Louver w/ and w/o Damper – L.M.I.

APPROVAL DOCUMENT: Drawing No. **1605WDM**, titled "1605WDM Louver w/ and w/o Damper", sheets 1 through 21 of 21, dated 09/18/2017, with revision B dated 08/20/2024, prepared by manufacturer, signed and sealed by Wayne K. Helmila, P.E., bearing the Miami-Dade County Product Control revision stamp with the Notice of Acceptance number and expiration date by the Miami-Dade County Product Control Section.

MISSILE IMPACT RATING: Large and Small Missile Impact Resistant

LABELING: Each unit shall bear a permanent label with the manufacturer's name or logo, Houston, TX, model/series, and following statement: "Miami-Dade County Product Control Approved", unless otherwise noted herein.

LIMITATION: This system is to be installed in a location where the room behind the louver is designed to drain water penetrating into the room, and the room will house water resistant/waterproof equipment, components, or supplies.

RENEWAL of this NOA shall be considered after a renewal application has been filed and there has been no change in the applicable building code negatively affecting the performance of this product.

TERMINATION of this NOA will occur after the expiration date or if there has been a revision or change in the materials, use, and/or manufacture of the product or process. Misuse of this NOA as an endorsement of any product, for sales, advertising or any other purposes shall automatically terminate this NOA. Failure to comply with any section of this NOA shall be cause for termination and removal of NOA.

ADVERTISEMENT: The NOA number preceded by the words Miami-Dade County, Florida, and followed by the expiration date may be displayed in advertising literature. If any portion of the NOA is displayed, then it shall be done in its entirety.

INSPECTION: A copy of this entire NOA shall be provided to the user by the manufacturer or its distributors and shall be available for inspection at the job site at the request of the Building Official.

This NOA **revises NOA No. 23-0724.24** and consists of this page 1 and evidence pages E-1 and E-2, as well as approval document mentioned above.

The submitted documentation was reviewed by **Carlos M. Utrera, P.E.**

MIAMI-DADE COUNTY APPROVED

09/03/24

NOA No. 24-0516.05
Expiration Date: August 30, 2028
Approval Date: September 12, 2024

Nailor Industries Inc.

NOTICE OF ACCEPTANCE: EVIDENCE SUBMITTED

1. EVIDENCE SUBMITTED UNDER PREVIOUS NOA's

A. DRAWINGS *"Submitted under NOA No. 18-0117.13"*

1. Drawing No. **1605WDM**, titled "1605WDM Louver w/ and w/o Damper", sheets 1 through 21 of 21, dated 09/18/17, prepared by the manufacturer, signed and sealed by Wayne K. Helmila, P.E.

B. TESTS *"Submitted under NOA No. 18-0117.13"*

1. Test reports on: 1) Uniform Static Air Pressure Test, Loading per FBC, TAS 202-94
2) Large Missile Impact Test per FBC, TAS 201-94
3) Cyclic Wind Pressure Loading per FBC, TAS 203-94
along with installation diagram of Model 1605WDM Louver System, prepared by Intertek, Test Report No. **H3539.01-801-18-R2**, dated 09/20/17 and revised on 05/24/18, signed and sealed by Tyler Westerling, P.E.

2. Test Report on Wind Driven Rain Resistance Test per TAS 100(A)-95 on a Model 1605 WDM Aluminum Louver with damper, prepared by Intertek, Test Report No. **H0223.04-801-18-R1,** dated 09/28/17 and revised on 11/21/17, signed and sealed by Tyler Westerling, P.E.

3. Test Report on High Velocity Wind Driven Rain Resistance Test per ANSI/AMCA 550-09 on a Model 1605WDM Aluminum Louver with damper, prepared by Intertek, Test Report No. **H0223.03-801-18-R1,** dated 09/28/17 and revised on 11/21/17, signed and sealed by Tyler Westerling, P.E.

C. CALCULATIONS *"Submitted under NOA No. 18-0117.13"*

1. Louver structural calculations dated 11/02/17, prepared by Rice Engineering, signed and sealed by Wayne K. Helmila, P.E.

D. QUALITY ASSURANCE

1. Miami-Dade Department of Regulatory and Economic Resources (RER).

E. MATERIAL CERTIFICATIONS

1. None.

F. STATEMENTS *"Submitted under NOA No. 18-0117.13"*

1. Statement letter of code conformance to the FBC 6th Edition (2017) issued by Rice Engineering, dated 04/16/18, signed and sealed by Wayne K. Helmila, P.E.

2. Statement letter of no financial interest issued by Rice Engineering, dated 04/16/18, signed and sealed by Wayne K. Helmila, P.E.

Carlos M. Utrera, P.E.
Product Control Examiner
NOA No. 24-0516.05
Expiration Date: August 30, 2028
Approval Date: September 12, 2024

NOTICE OF ACCEPTANCE: EVIDENCE SUBMITTED

2. EVIDENCE SUBMITTED UNDER NOA # 21-0630.11 AND NEW

A. DRAWINGS

1. Drawing No. **1605WDM**, titled "1605WDM Louver w/ and w/o Damper", sheets 1 through 21 of 21, dated 09/18/2017, with revision B dated 08/20/2024, prepared by the manufacturer, signed and sealed by Wayne K. Helmila, P.E.

B. TESTS

1. None.

C. CALCULATIONS

1. Louver calculations, prepared by Rice Engineering, dated 08/14/2024, signed and sealed by Wayne K. Helmila, P.E.

D. QUALITY ASSURANCE

1. Miami-Dade Department of Regulatory and Economic Resources (RER).

E. MATERIAL CERTIFICATIONS

1. None.

F. STATEMENTS

1. Statement letter of code conformance to the 8th edition (2023) of the FBC, issued by Rice Engineering, dated 08/20/2024, signed and sealed by Wayne K. Helmila, P.E.

2. Statement letter of no financial interest, issued by Rice Engineering, dated 08/20/2024, signed and sealed by Wayne K. Helmila, P.E.

"Submitted under NOA # 21-0630.11"

3. Statement letter of code conformance to the 7th edition (2020) FBC, issued by Rice Engineering, dated 05/19/21, signed and sealed by Wayne K. Helmila, P.E.

Carlos M. Utrera, P.E.
Product Control Examiner
NOA No. 24-0516.05
Expiration Date: August 30, 2028
Approval Date: September 12, 2024

DRAWING INDEX:

1. INDEX TO DRAWING AND NOTES.
2. 1605WDM LOUVER- FLANGE FRAME SLEEVE MOUINT
3. 1605WDM LOUVER- CONTINUOUS ANGLE MOUNT
4. 1605WDM / DAMPER- FLANGE FRAME SLEEVE MOUNT
5. 1605WDM / DAMPER- CONTINUOUS ANGLE MOUNT
6. 1605WDM LOUVER- FLANGE FRAME SLEEVE MOUNT HEAD & SILL DETAIL
7. 1605WDM LOUVER- CONTINUOUS ANGLE MOUNT & CMU MULLION ANGLE- HEAD & SILL DETAIL.
8. 1605WDM LOUVER- BLADE SUPPORT DETAIL.
9. 1605WDM LOUVER- FLANGE FRAME SLEEVE MOUNT JAMB & BLADE BRACE DETAIL
10. 1605WDM LOUVER- CONTINUOUS ANGLE MOUNT JAMB & BLADE BRACE DETAIL
11. 1605WDM LOUVER- FLANGE FRAME SLEEVE MOUNT MULLION DETAIL
12. 1605WDM LOUVER- FLANGE FRAME SLEEVE MOUNT 72" BLADE MULLION DETAIL
13. 1605WDM LOUVER- CONTINUOUS ANGLE MOUNT MULLION DETAIL.
14. 1605WDM LOUVER- CONTINUOUS ANGLE MOUNT 72" BLADE MULLION DETAIL
15. 1605WDM LOUVER / DAMPER FLANGE FRAME W/ SLEEVE & CONTINUOUS ANGLE HEAD & SILL DETAIL
16. 1605WDM LOUVER-CONTINUOUS ANGLE MOUNT CMU MULLION ANGLE -HEAD & SILL DETAIL
17. 1605WDM LOUVER / DAMPER- FLANGE FRAME SLEEVE MOUNT JAMB AND MULLION DETAIL
18. 1605WDM LOUVER / DAMPER - FLANGE FRAME SLEEVE MOUNT 36" BLADE MULLION DETAIL
19. 1605WDM LOUVER / DAMPER CONTINUOUS ANGLE MOUNT JAMB AND MULLION DETAIL
20. 1605WDM LOUVER / DAMPER - CONTINUOUS ANGLE MOUNT 36" BLADE MULLION DETAIL
21. 1605WDM LOUVER W/ AND W/O DAMPER- SLEEVE / CONTINUOUS MOUNT PART PROFILES.
22. 1605WDM LOUVER W/ AND W/O DAMPER- SLEEVE / CONTINUOUS MOUNT PART PROFILES CONT.
23. 22" MULLION ANGLES BACK OF WALL MOUNT
24. 30" MULLION ANGLE - 22" MULLION ANGLES BACK OF THE WALL MOUNT
25. 16" MULLION ANGLES- BACK OF THE WALL MOUNTS
26. 30" CMU MULLION ANGLE- BACK OF THE WALL
27. 1605WDM LOUVER W/ AND W/O DAMPER AVAILABLE SHAPES
28. 1605WDM LOUVER W/ AND W/O DAMPER- SLEEVE / CONTINUOUS MOUNT BILL OF MATERIAL.
29. 1605WDM LOUVER W/ AND W/O DAMPER SLEEVE FASTENER SCHEDULE.
30. 1605WDM LOUVER W/ AND W/O DAMPER SLEEVE GENERAL NOTES

NOTES:

1) THE 1605WDM HAS BEEN TESTEDIN ACCORDANCE WITH THE MIAMI-DADE COUNTY PROTOCOLS TAS-201, 202, & 203 FOR LARGE MISSILE IMPACT, UNIFORM PRESSURE AND CYCLIC WIND PRESSURE.

2) THIS LOUVER SYSTEM IS APPROVED FOR APPLICATIONS WITH DESIGN PRESSURES OF +/- 150 PSF OR LESS

3) THIS LOUVER SYSTEM IS NON-BEARING AND IS NOT DESIGNED TO WITHSTAND BUILDING DEAD LOADS.

4) LOUVER ANCHORS ARE REVIEWED FOR ATTACHMENT INTO STEEL, CONCRETE, MASONRY, OR TIMBER SUBSTRUCTURE. MIMIMUM EDGE DISTANCE AND EMBEDMENT REQUIREMENTS ARE SHOWN. NAILOR IND. DOES NOT DETERMINE THE STURCTURE INTEGRITY OF THE SUBSTRUCTURE.

5) MAXIMMUM SINGLE SECTION SIZE : 72" WIDE X 120" HIGH.

6) MAXIMUM ASSEMBLED LOUVER SIZE UNLIMITED WIDE X 120" HIGH. MAX. MULLION SPACING IS 72".

7) SECTIONS OR ASSEMBLIES MAY BE STACKED VERTICALLY PROVIDING A SUITABLE STRUCTURAL SUPPORT IS DESIGNED AND INSTALLED BY OTHERS TO SUPPORT ALL LOADS TRANSFERRED FROM THE LOUVER.

TESTS PREFORMED:
TAS100 A WIND DRIVEN RAIN RESISTANCE W/ DAMPER
TAS-201 LARGE MISSILE IMPACT
TAS-202 UNIFORM STATIC AIR PRESSURE TEST
TAS-203 CYCLIC WIND PRESUSRE TEST
DESIGN PRESSURE RATING 150 PSF

PRODUCT REVISED
as complying with the Florida Building Code
NOA-No. 24-0516.05
Expiration Date 08/30/2028
By
Miami-Dade Product Control

REVISIONS:
REV B: UPDATED DRAWING INDEX

DWN BY: fcortinas
CHK BY: MAstourian
DATE: 9/18/2017
SCALE: NTS
SHEET: 1 OF 30
REV B
DWG. NO. 1605WDM

Nailor Industries Inc.
4714 Winfield Road Houston, TX 77039
TEL: 281-590-1172 FAX: 281-590-3086
www.nailor.com

TITLE: 1605WDM LOUVER W/ AND W/O DAMPER INDEX

WAYNE K. HELMILA
LICENSE
No. 59092
STATE OF FLORIDA
PROFESSIONAL ENGINEER

08/20/2024
COA: 9090

RICE
ENGINEERING
105 School Creek Trail
Luxemburg, WI 54217
Phone: (920) 617-1042
Fax: (920) 617-1100
www.rice-inc.com

Florida Firm No: F-01000005061
Certificate of Authorization: #9090
Wayne K. Helmila
Registration No: 59092

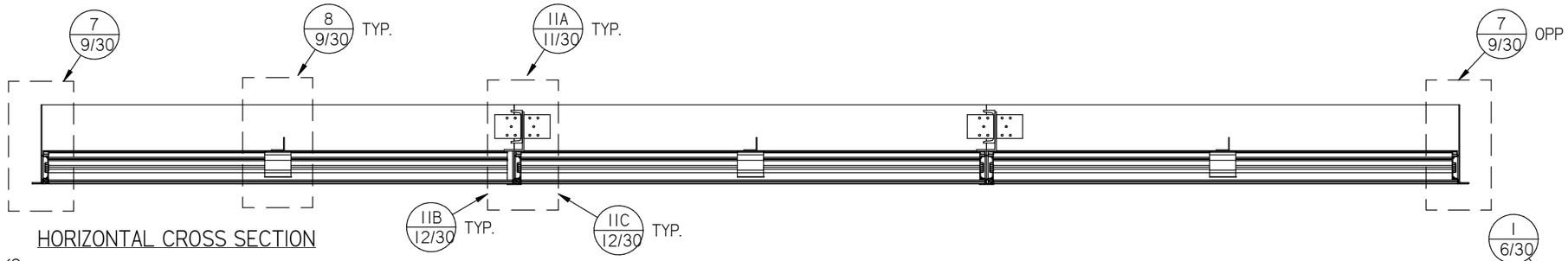

HORIZONTAL CROSS SECTION

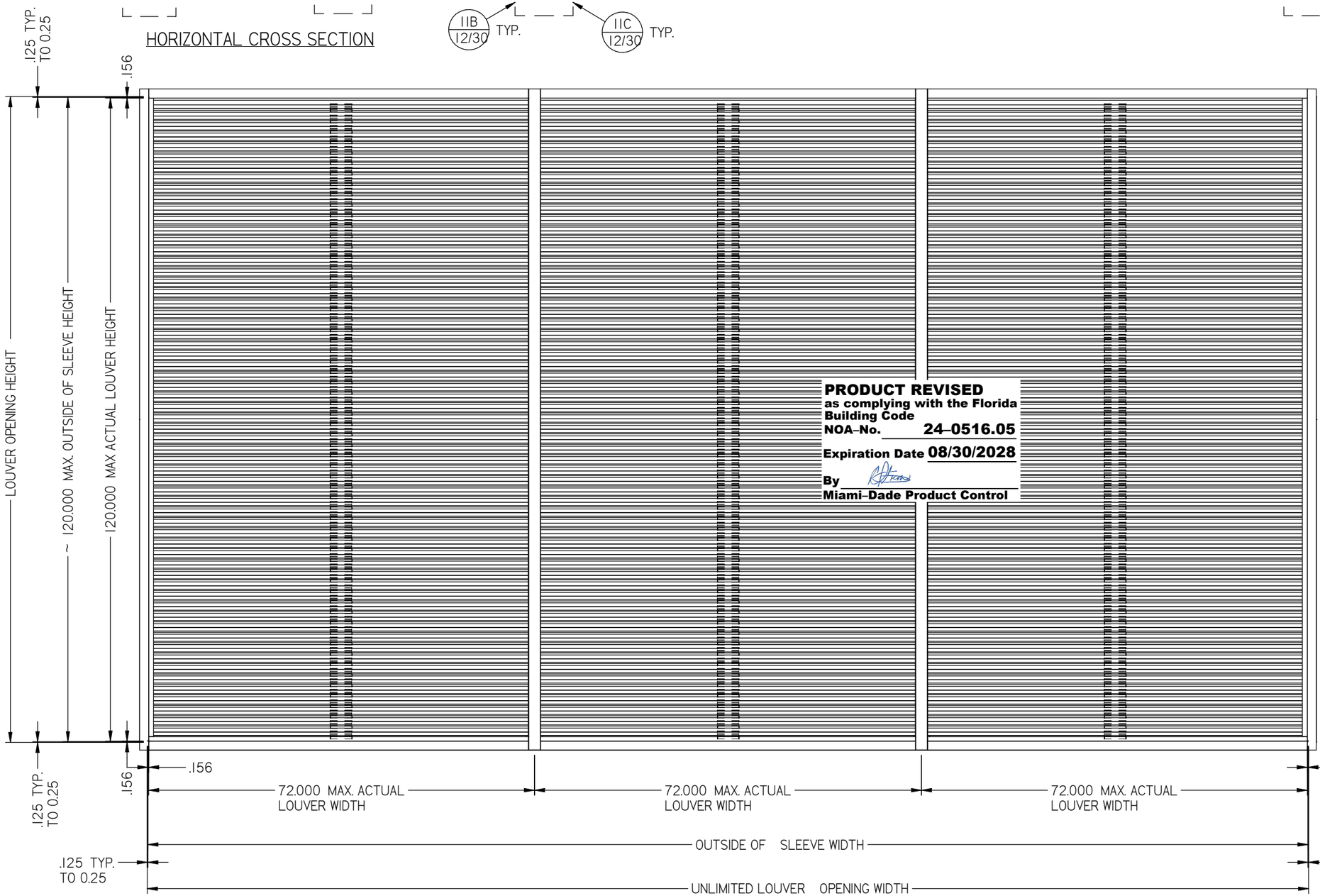

ELEVATION

PRODUCT REVISED
as complying with the Florida Building Code
NOA-No. 24-0516.05
Expiration Date 08/30/2028
By
Miami-Dade Product Control

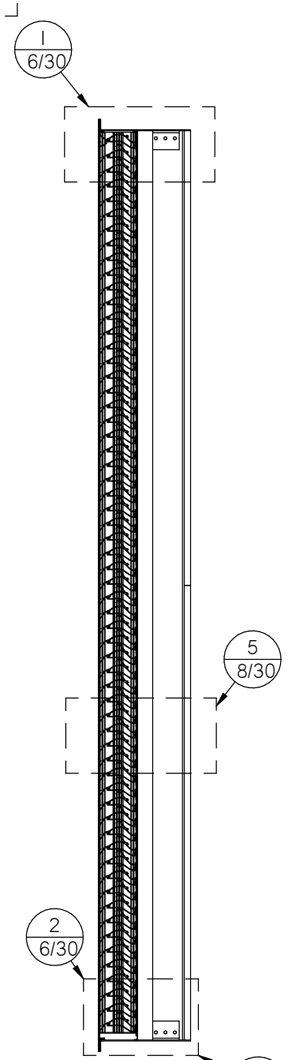

VERTICAL CROSS SECTION

REVISIONS:
REV B: ADDED DETAIL BUBBLES 11A, 11B,11C

DWN BY: fcortinas
CHK BY: MAstourian
DATE: 9/18/2017
SCALE: NTS
SHEET: 2 OF 30
REV B
DWG. NO. 1605WDM

Nailor Industries Inc.
4714 Winfield Road Houston, TX 77039
TEL: 281-590-1172 FAX: 281-590-3086
www.nailor.com

TITLE: 1605WDM LOUVER FLANGE FRAME SLEEVE MOUNT

WAYNE K. HELMILA
LICENSE
No. 59092
STATE OF FLORIDA
PROFESSIONAL ENGINEER

08/20/2024
COA: 9090

RICE
ENGINEERING
105 School Creek Trail
Luxemburg, WI 54217
Phone: (920) 617-1042
Fax: (920) 617-1100
www.rice-inc.com

Florida Firm No: F-01000005061
Certificate of Authorization: #9090
Wayne K. Helmila
Registration No: 59092

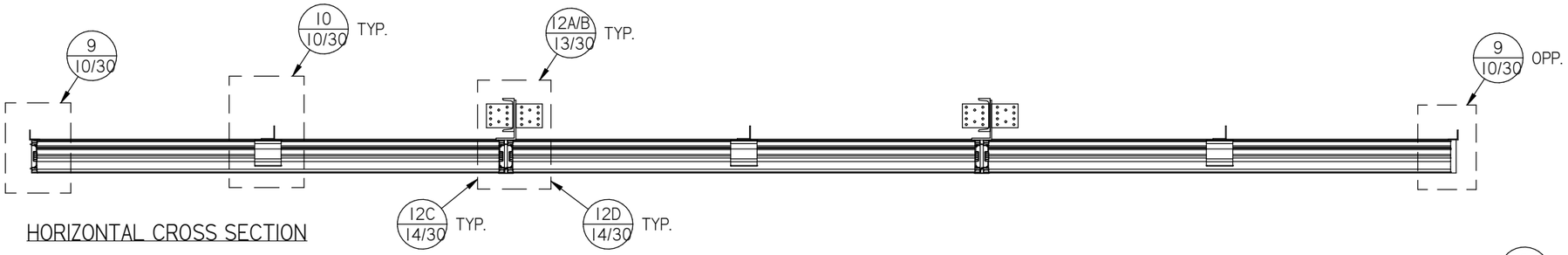

HORIZONTAL CROSS SECTION

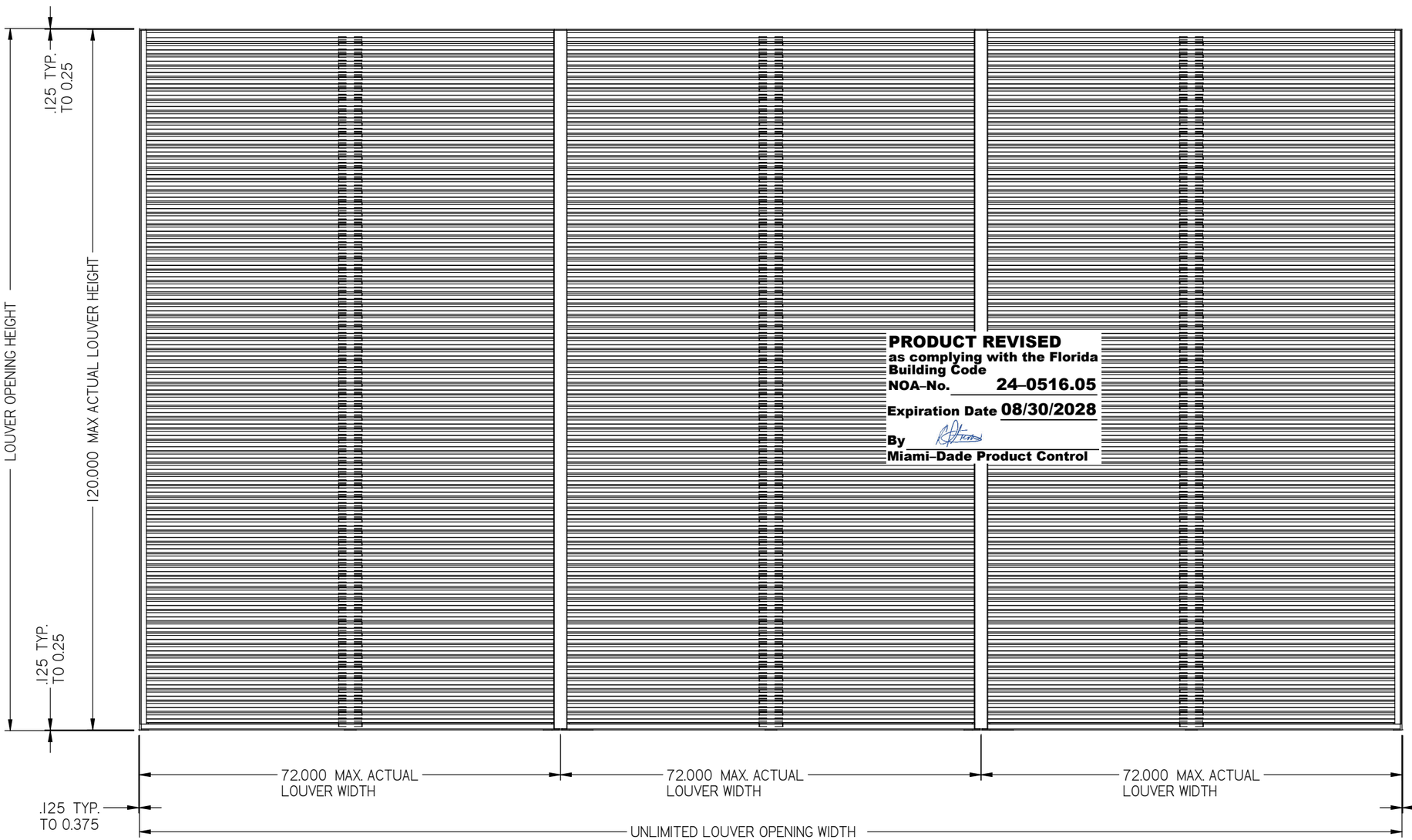

PRODUCT REVISED
as complying with the Florida Building Code
NOA-No. 24-0516.05
Expiration Date 08/30/2028
By
Miami-Dade Product Control

ELEVATION

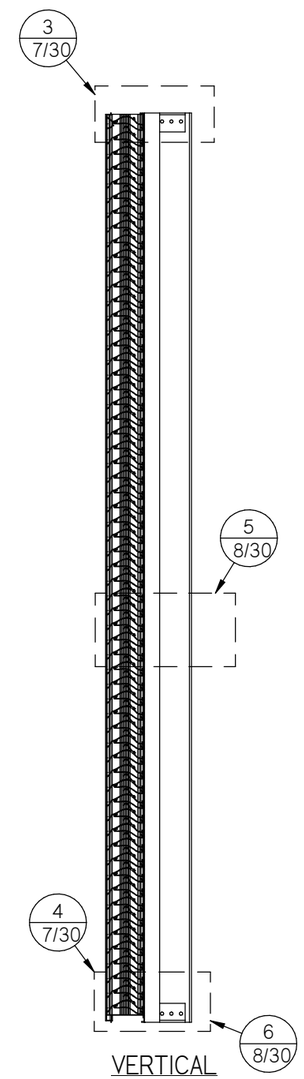

VERTICAL
CROSS SECTION

FOR THIS ELEVATION WHERE THE LOUVER BLADES ARE SPANNING 72" THE CMU WALL ANCHORS ARE ADEQUATE FOR A MAXIMUM DESIGN PRESSURE IS +/- 80 PSF. SEE ALSO NOTE ON SHEET 26 OF 30

REVISIONS:
REV B: ADDED DETAIL BUBBLES 12A/B, 12C,12D

DWN BY: fcortinas
CHK BY: MAstourian
DATE: 9/18/2017
SCALE: NTS
SHEET: 3 OF 30
REV B
DWG. NO. 1605WDM

Nailor Industries Inc.
4714 Winfield Road Houston, TX 77039
TEL: 281-590-1172 FAX: 281-590-3086
www.nailor.com

TITLE: 1605WDM LOUVER
COUNTINOUS ANGLE MOUNT

WAYNE K. HELMILA
LICENSE
No. 59092
STATE OF
FLORIDA
PROFESSIONAL ENGINEER

08/20/2024
COA: 9090

RICE
ENGINEERING
105 School Creek Trail
Luxemburg, WI 54217
Phone: (920) 617-1042
Fax: (920) 617-1100
www.rice-inc.com

Florida Firm No: F-01000005061
Certificate of Authorization: #9090
Wayne K. Helmila
Registration No: 59092

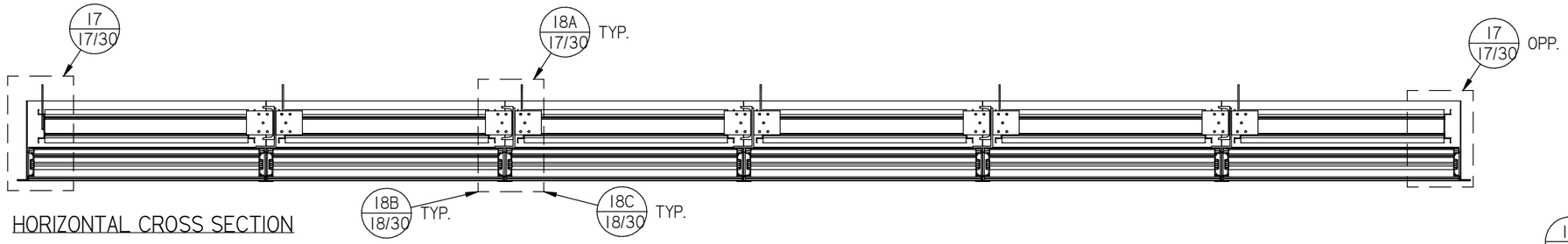

HORIZONTAL CROSS SECTION

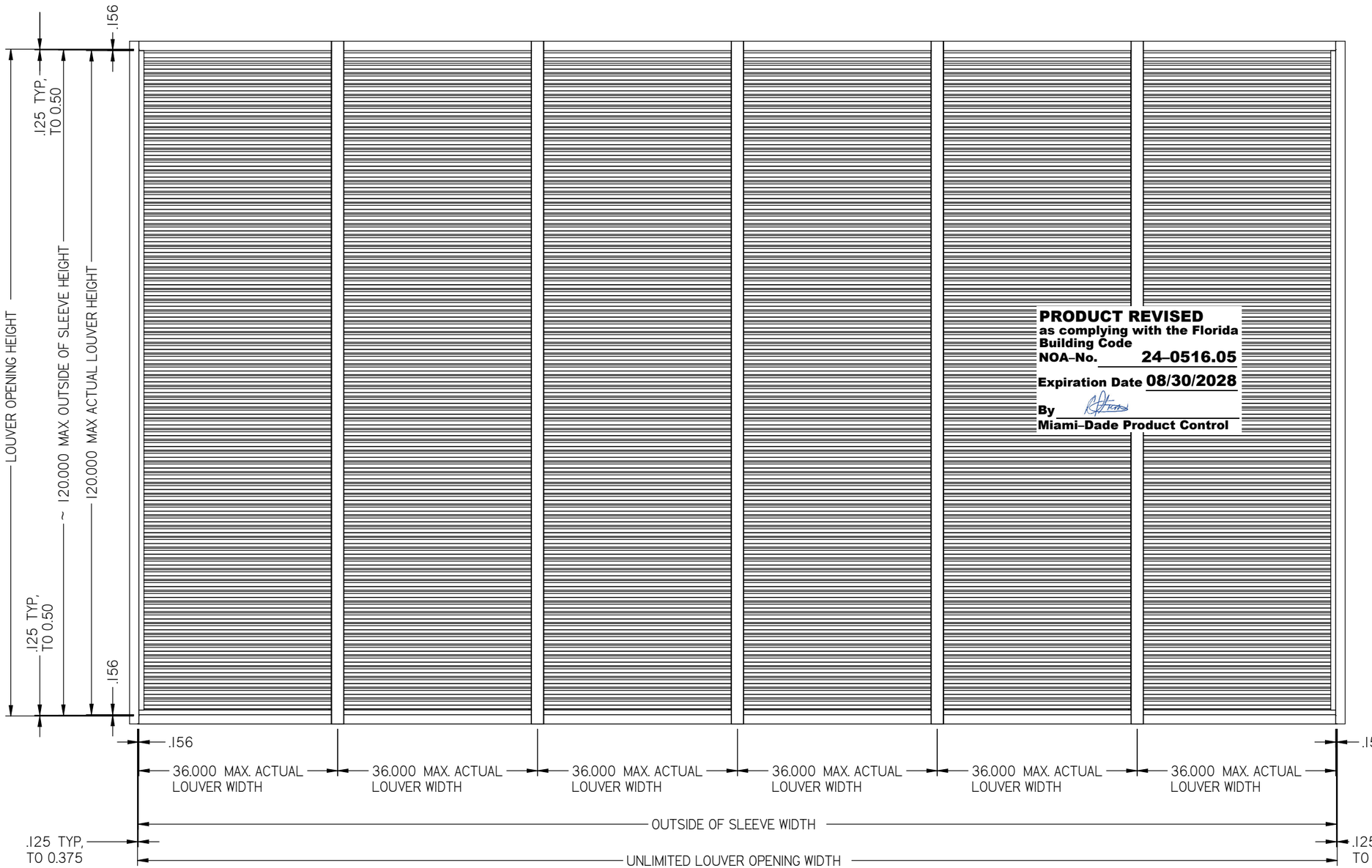

ELEVATION

PRODUCT REVISED
as complying with the Florida Building Code
NOA-No. 24-0516.05
Expiration Date 08/30/2028
By
Miami-Dade Product Control

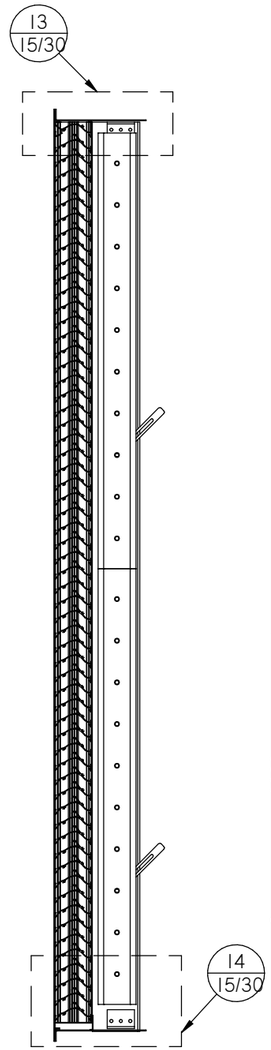

VERTICAL
CROSS SECTION

REVISIONS:
REV B: ADDED DETAIL BUBBLES 18A, 18B,18C

DWN BY: fcortinas
CHK BY: MAstourian
DATE: 9/18/2017
SCALE: NTS
SHEET: 4 OF 30
REV B
DWG. NO. 1605WDM

Nailor Industries Inc.
4714 Winfield Road Houston, TX 77039
TEL: 281-590-1172 FAX: 281-590-3086
www.nailor.com

TITLE: 1605WDM / DAMPER FLANGE FRAME SLEEVE MOUNT

WAYNE K. HELMILA
LICENSE
No. 59092
STATE OF
FLORIDA
PROFESSIONAL ENGINEER

08/20/2024
COA: 9090

RICE
ENGINEERING
105 School Creek Trail
Luxemburg, WI 54217
Phone: (920) 617-1042
Fax: (920) 617-1100
www.rice-inc.com

Florida Firm No: F-01000005061
Certificate of Authorization: #9090
Wayne K. Helmila
Registration No: 59092

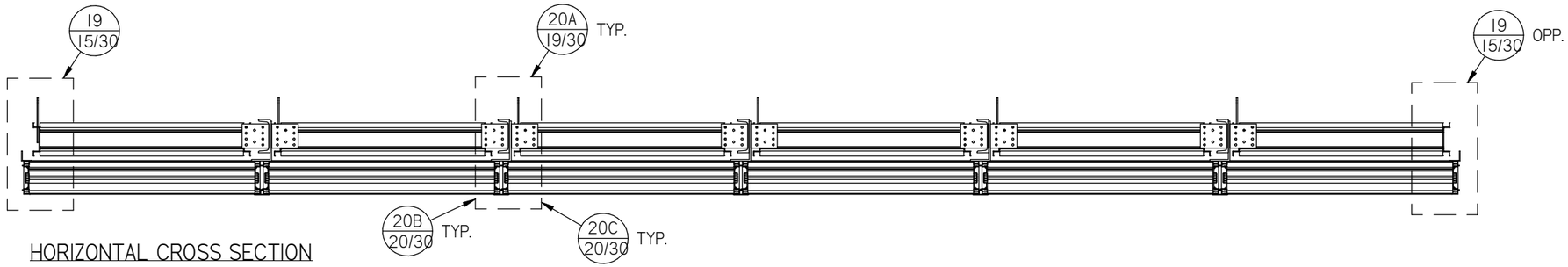

HORIZONTAL CROSS SECTION

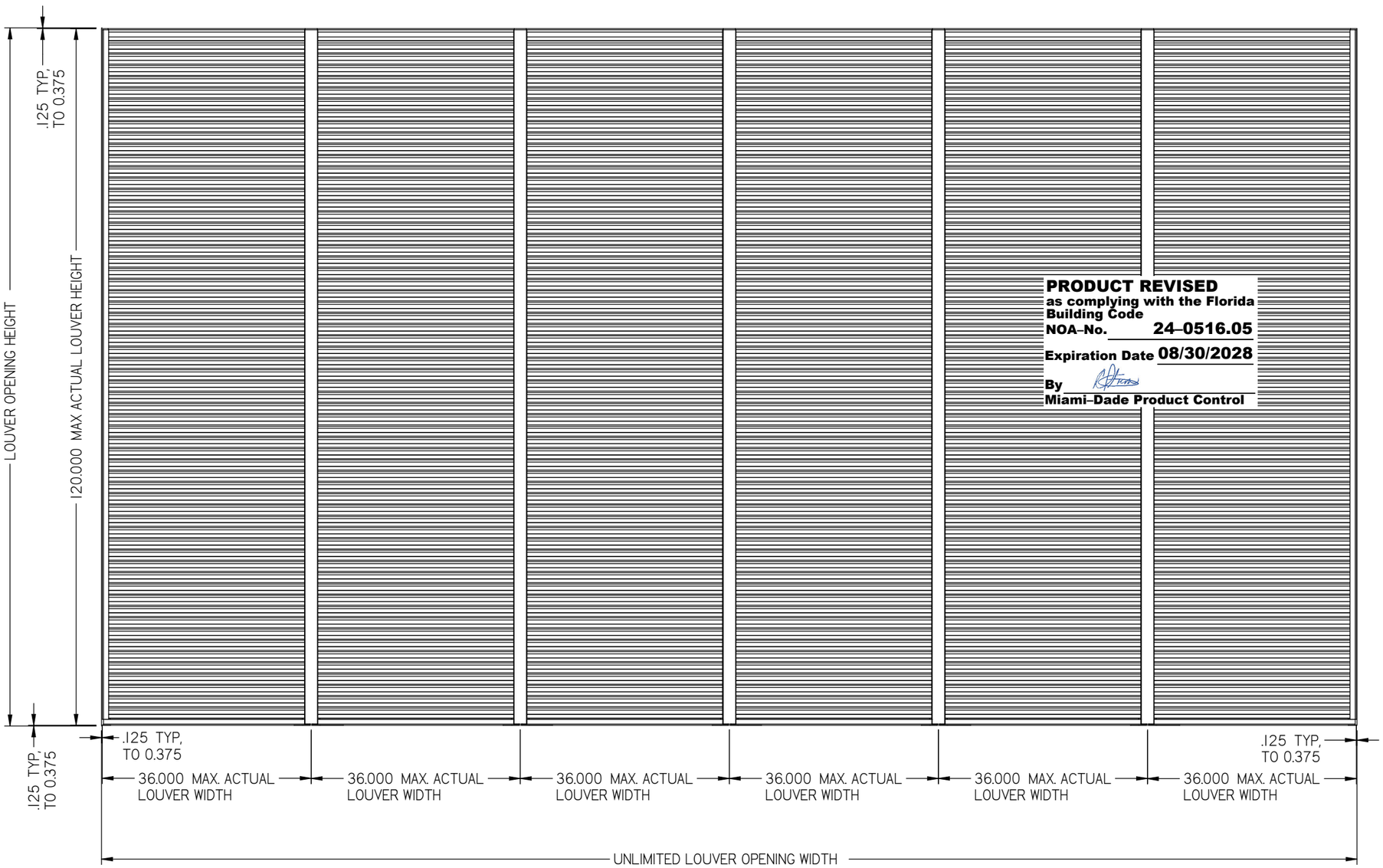

PRODUCT REVISED
as complying with the Florida Building Code
NOA-No. 24-0516.05
Expiration Date 08/30/2028
By
Miami-Dade Product Control

ELEVATION

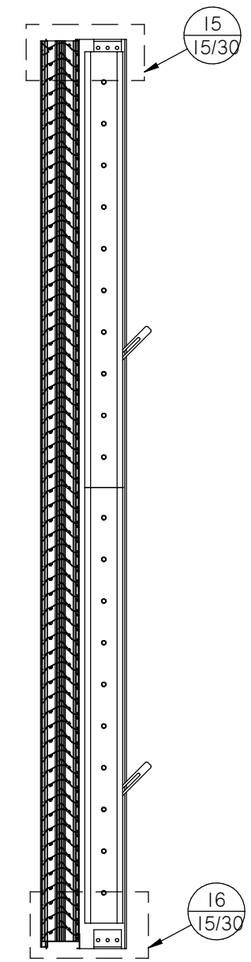

VERTICAL
CROSS SECTION

REVISIONS:
REV B: ADDED DETAIL BUBBLES 20A, 20B, 20C

DWN BY: fcortinas
CHK BY: MAstourian
DATE: 9/18/2017
SCALE: NTS
SHEET: 5 OF 30
REV B
DWG. NO. 1605WDM

Nailor Industries Inc.
4714 Winfield Road Houston, TX 77039
TEL: 281-590-1172 FAX: 281-590-3086
www.nailor.com

TITLE: 1605WDM / DAMPER CONTINOUS ANGLE MOUNT

WAYNE K. HELMILA
LICENSE
No. 59092
STATE OF
FLORIDA
PROFESSIONAL ENGINEER

08/20/2024
COA: 9090

RICE
ENGINEERING
105 School Creek Trail
Luxemburg, WI 54217
Phone: (920) 617-1042
Fax: (920) 617-1100
www.rice-inc.com

Florida Firm No: F-01000005061
Certificate of Authorization: #9090
Wayne K. Helmila
Registration No: 59092

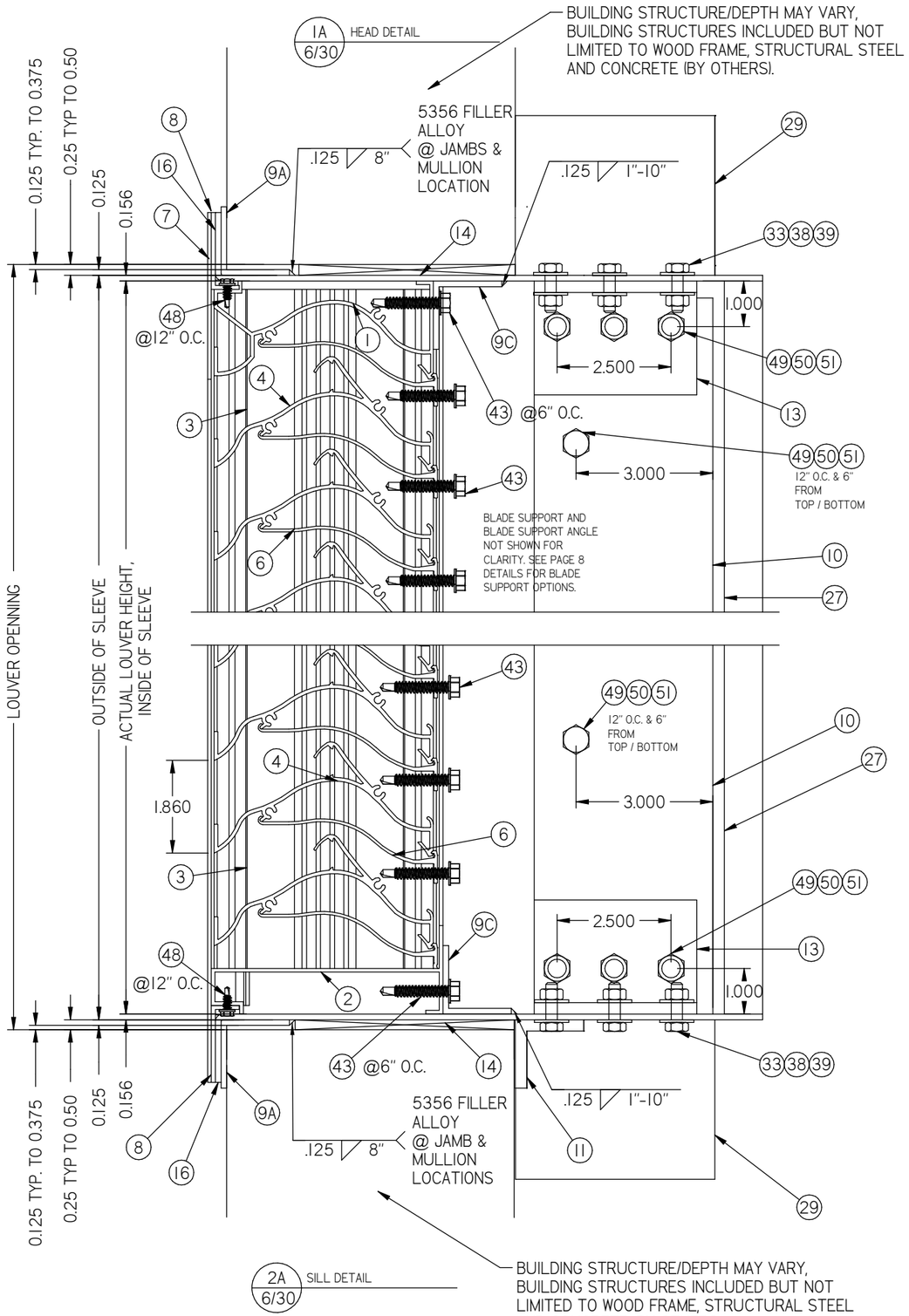

PRODUCT REVISED
as complying with the Florida Building Code
NOA-No. 24-0516.05
Expiration Date 08/30/2028
By
Miami-Dade Product Control

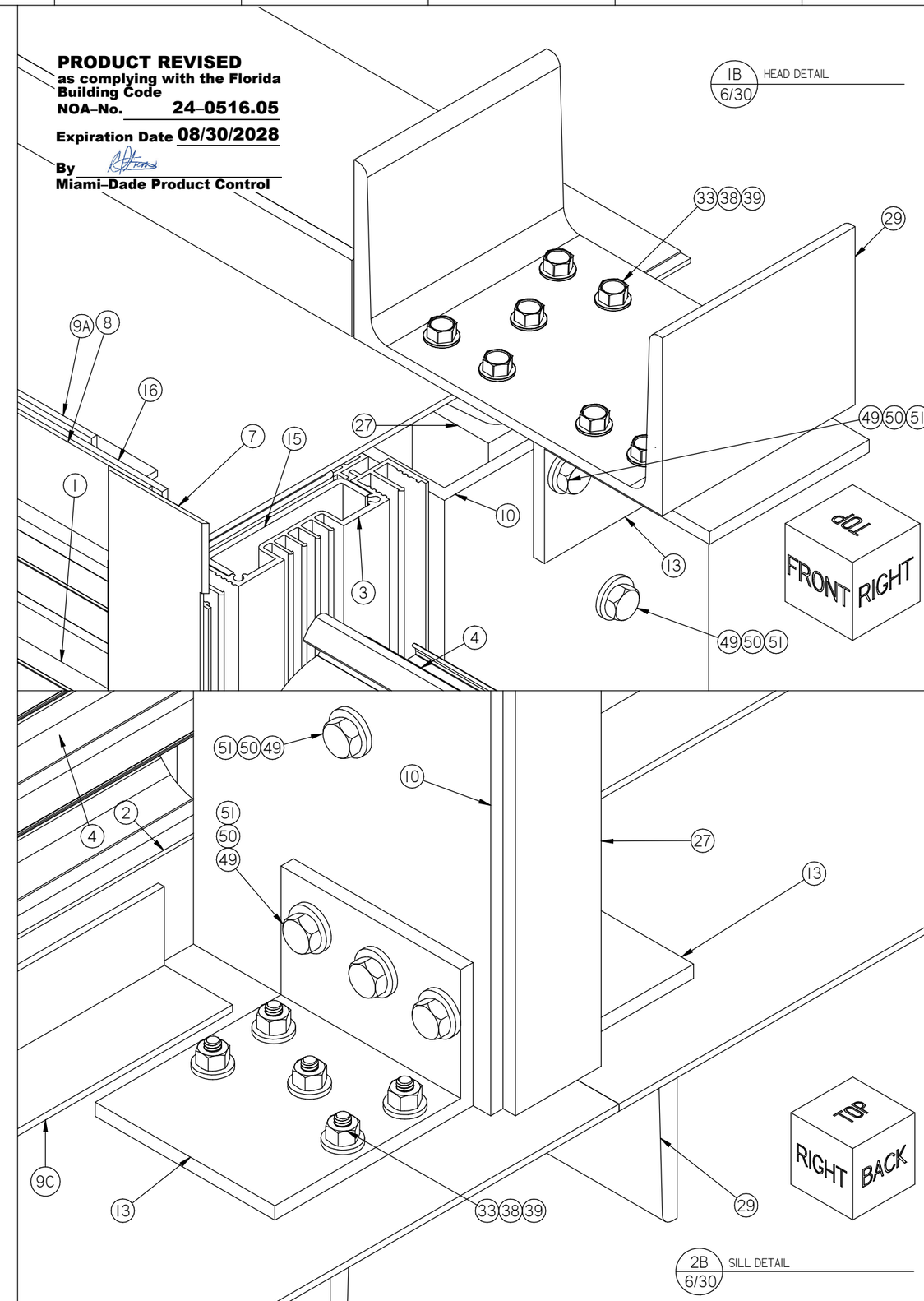

DWN BY: fcortinas
CHK BY: MAstourian
DATE: 9/18/2017
SCALE: NTS
SHEET: 6 OF 30
REV B
DWG. NO. 1605WDM

Nailor Industries Inc.
4714 Winfield Road Houston, TX 77039
TEL: 281-590-1172 FAX: 281-590-3086
www.nailor.com

TITLE 1605WDM LOUVER FLANGE FRAME SLEEVE MOUNT HEAD & SILL DETAIL

WAYNE K. HELMILA
LICENSE
No. 59092
STATE OF FLORIDA
PROFESSIONAL ENGINEER

08/20/2024
COA: 9090

RICE
ENGINEERING
105 School Creek Trail
Luxemburg, WI 54217
Phone: (920) 617-1042
Fax: (920) 617-1100
www.rice-inc.com

Florida Firm No: F-01000005061
Certificate of Authorization: #9090
Wayne K. Helmila
Registration No: 59092

MULLION ANGLE DIRECT MOUNT (SHOWN HERE AT HEAD) IS FOR SUBSTRATES WHERE MINIMUM FASTENER EDGE DISTANCE CAN BE ACHIEVED BY USE OF HOLES IN THE MULLION END CAP. DETAIL IS TYPICAL FOR BOTH HEAD AND SILL CONDITIONS WHEN APPLICABLE.

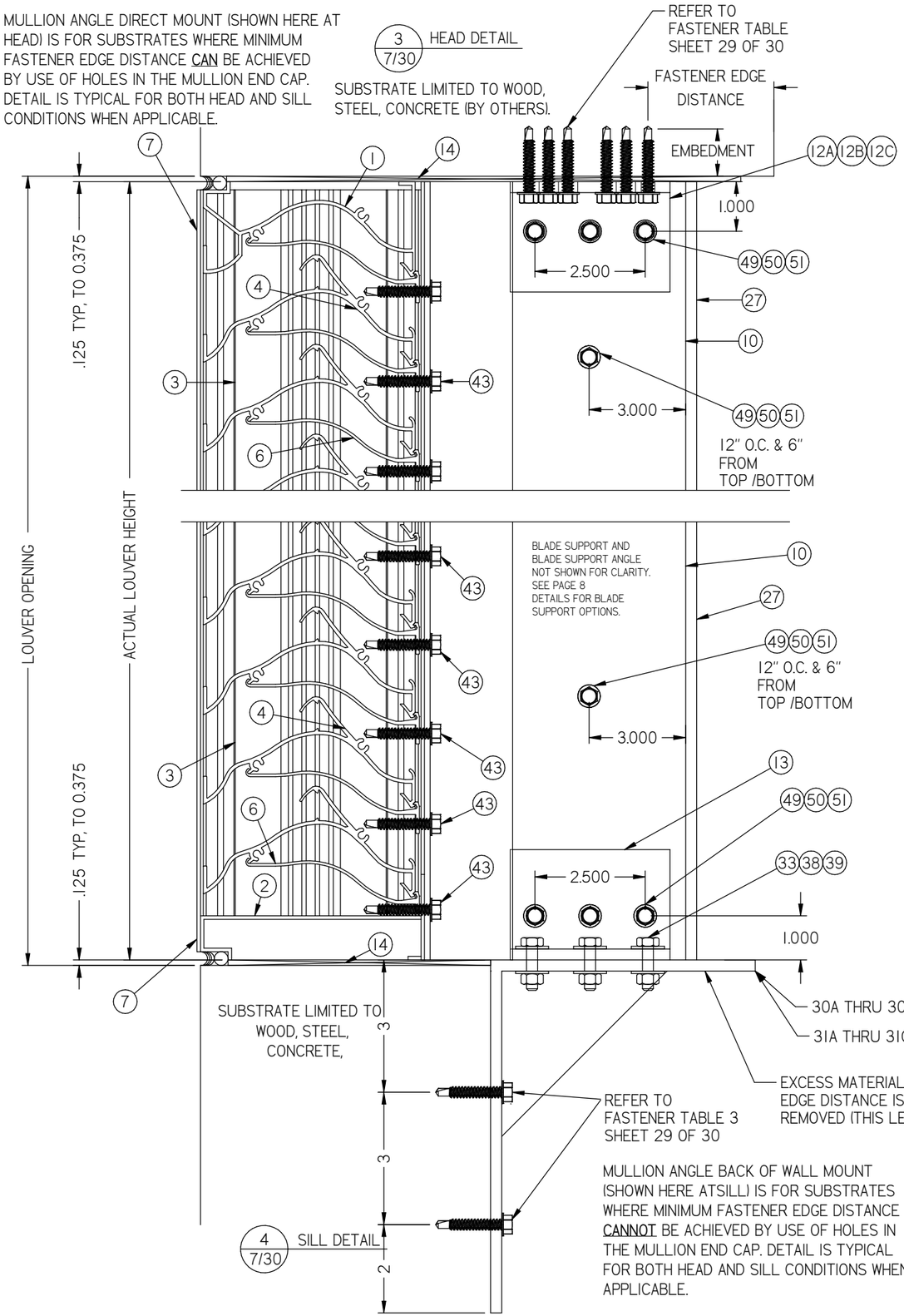

MULLION ANGLE BACK OF WALL MOUNT (SHOWN HERE ATSILL) IS FOR SUBSTRATES WHERE MINIMUM FASTENER EDGE DISTANCE CANNOT BE ACHIEVED BY USE OF HOLES IN THE MULLION END CAP. DETAIL IS TYPICAL FOR BOTH HEAD AND SILL CONDITIONS WHEN APPLICABLE.

PRODUCT REVISED
as complying with the Florida Building Code
NOA-No. 24-0516.05
Expiration Date 08/30/2028
By
Miami-Dade Product Control

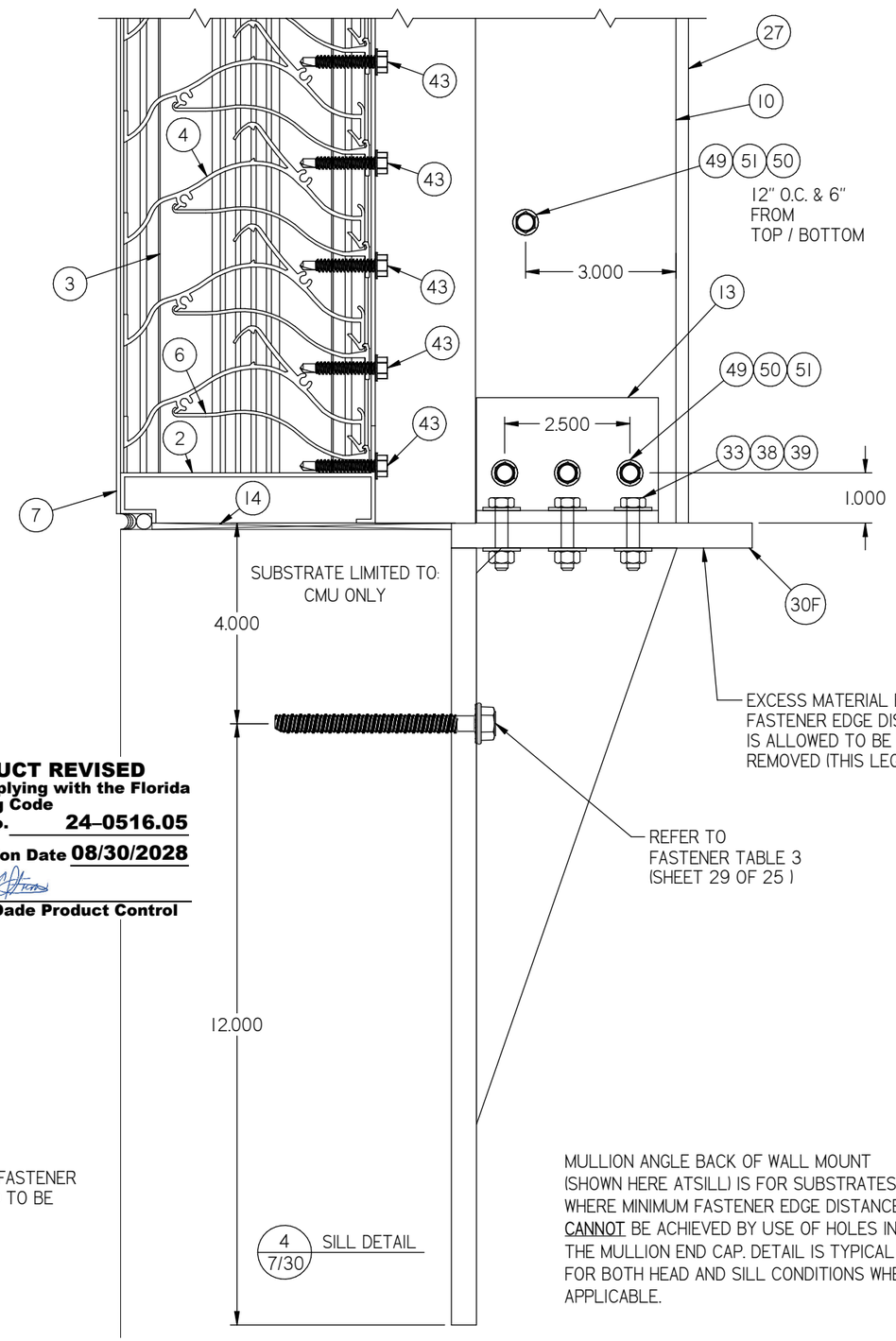

MULLION ANGLE BACK OF WALL MOUNT (SHOWN HERE ATSILL) IS FOR SUBSTRATES WHERE MINIMUM FASTENER EDGE DISTANCE CANNOT BE ACHIEVED BY USE OF HOLES IN THE MULLION END CAP. DETAIL IS TYPICAL FOR BOTH HEAD AND SILL CONDITIONS WHEN APPLICABLE.

REVISIONS:
REV B: ADDED CMU MULLION ANGLE DETAIL

DWN BY: fcortinas
CHK BY: MAstourian
DATE: 9/18/2017
SCALE: NTS
SHEET: 7 OF 30
REV B
DWG. NO. 1605WDM

Nailor Industries Inc.
4714 Winfield Road Houston, TX 77039
TEL: 281-590-1172 FAX: 281-590-3086
www.nailor.com

TITLE: 1605WDM LOUVER CONTINUOUS ANGLE MOUNT AND CMU MULLION ANGLE HEAD & SILL DETAILS

WAYNE K. HELMILA
LICENSE
No. 59092
STATE OF FLORIDA
PROFESSIONAL ENGINEER
08/20/2024
COA: 9090

RICE ENGINEERING
105 School Creek Trail
Luxemburg, WI 54217
Phone: (920) 617-1042
Fax: (920) 617-1100
www.rice-inc.com
Florida Firm No: F-01000005061
Certificate of Authorization: #9090
Wayne K. Helmila
Registration No: 59092

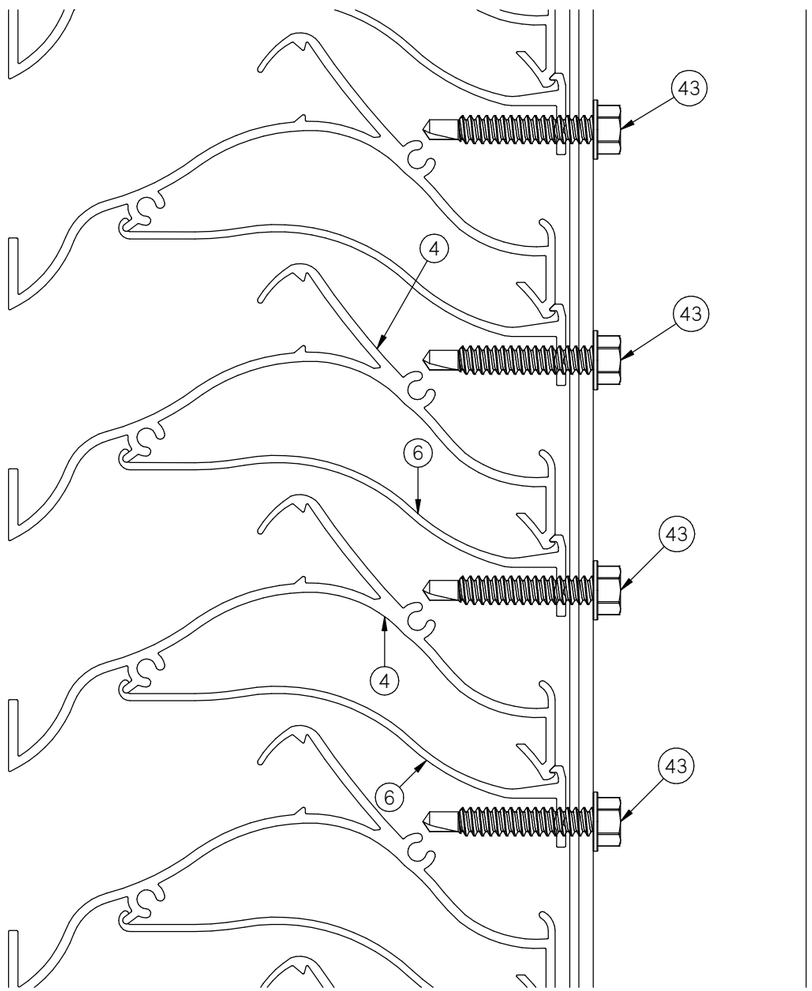

5 / 8/30 BLADE SUPPORT DETAIL

NOTE: THE BLADE SUPPORT ANGLE (ITEM 10 IS NOT SHOWN IN THE DETAILS IN ORDER TO IMPROVE CLARITY. THE BLADE SUPPORT ANGLE IS ATTACHED TO THE BLADE SUPPORT BRACE (ITEM 6).
BLADE SUPPORT BRACE6 (SHOWN) IS ANY OF THE DRAWINGS FOR DETAIL 6.

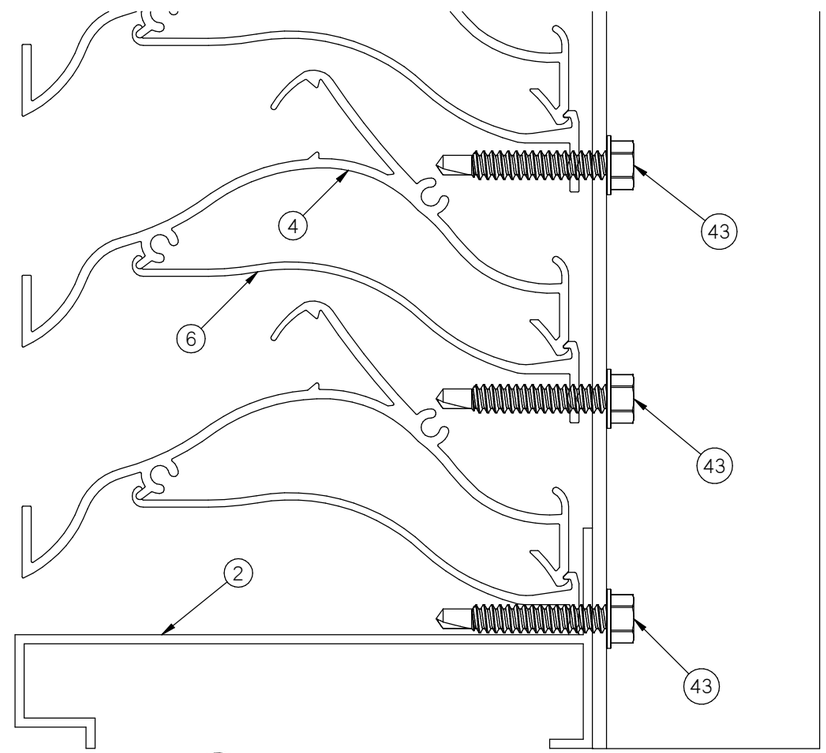

6 / 8/30 BOTTOM BLADE SUPPORT DETAIL

PRODUCT REVISED
as complying with the Florida Building Code
NOA-No. 24-0516.05
Expiration Date 08/30/2028
By
Miami-Dade Product Control

DWN BY: fcortinas
CHK BY: MAstourian
DATE: 9/18/2017
SCALE: NTS
SHEET: 8 OF 30
REV B
DWG. NO. 1605WDM

Nailor Industries Inc.
4714 Winfield Road Houston, TX 77039
TEL: 281-590-1172 FAX: 281-590-3086
www.nailor.com

TITLE: 1605WDM LOUVER BLADE SUPPORT DETAIL

WAYNE K. HELMILA
LICENSE
No. 59092
STATE OF FLORIDA
PROFESSIONAL ENGINEER
08/20/2024
COA: 9090

RICE
ENGINEERING
105 School Creek Trail
Luxemburg, WI 54217
Phone: (920) 617-1042
Fax: (920) 617-1100
www.rice-inc.com
Florida Firm No: F-01000005061
Certificate of Authorization: #9090
Wayne K. Helmila
Registration No: 59092

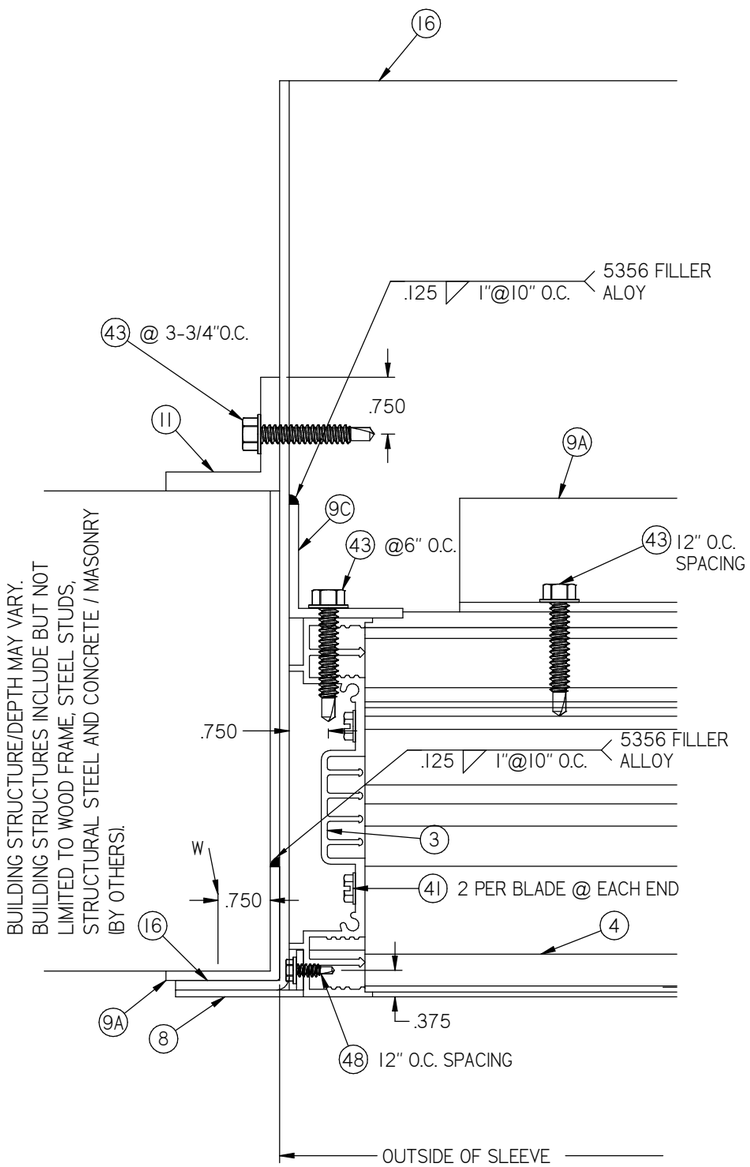

7 / 9/30 JAMB DETAIL

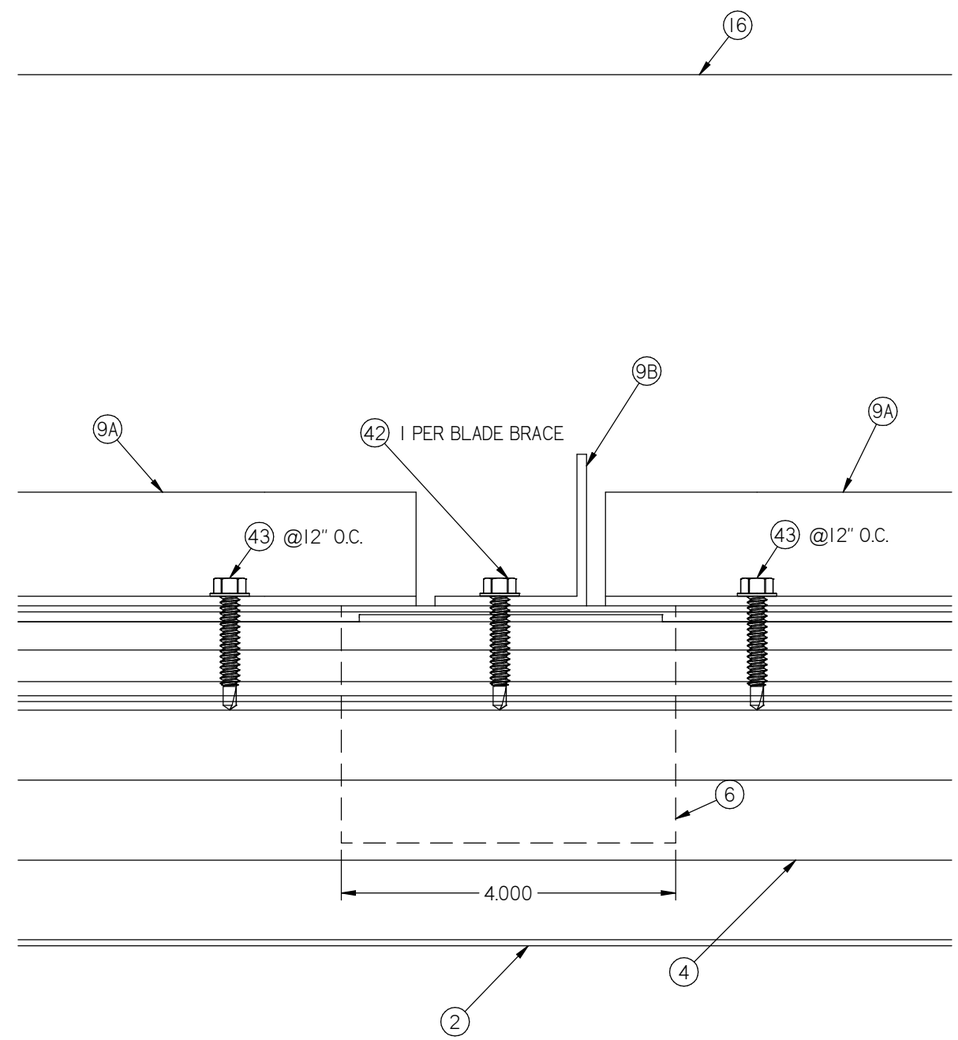

8 / 9/30 SUPPORT DETAIL

PRODUCT REVISED
as complying with the Florida Building Code
NOA-No. 24-0516.05
Expiration Date 08/30/2028
By
Miami-Dade Product Control

DWN BY: fcortinas
CHK BY: MAstourian
DATE: 9/18/2017
SCALE: NTS
SHEET: 9 OF 30
REV B
DWG. NO. 1605WDM

Nailor Industries Inc.
4714 Winfield Road Houston, TX 77039
TEL: 281-590-1172 FAX: 281-590-3086
www.nailor.com

TITLE: 1605WDM LOUVER FLANGE FRAME SLEEVE MOUNT JAMB & BLADE BRACE DETAIL

WAYNE K. HELMILA
LICENSE
No. 59092
STATE OF FLORIDA
PROFESSIONAL ENGINEER

08/20/2024
COA: 9090

RICE
ENGINEERING
105 School Creek Trail
Luxemburg, WI 54217
Phone: (920) 617-1042
Fax: (920) 617-1100
www.rice-inc.com

Florida Firm No: F-01000005061
Certificate of Authorization: #9090
Wayne K. Helmila
Registration No: 59092

PRODUCT REVISED
as complying with the Florida Building Code
NOA-No. 24-0516.05
Expiration Date 08/30/2028
By
Miami-Dade Product Control

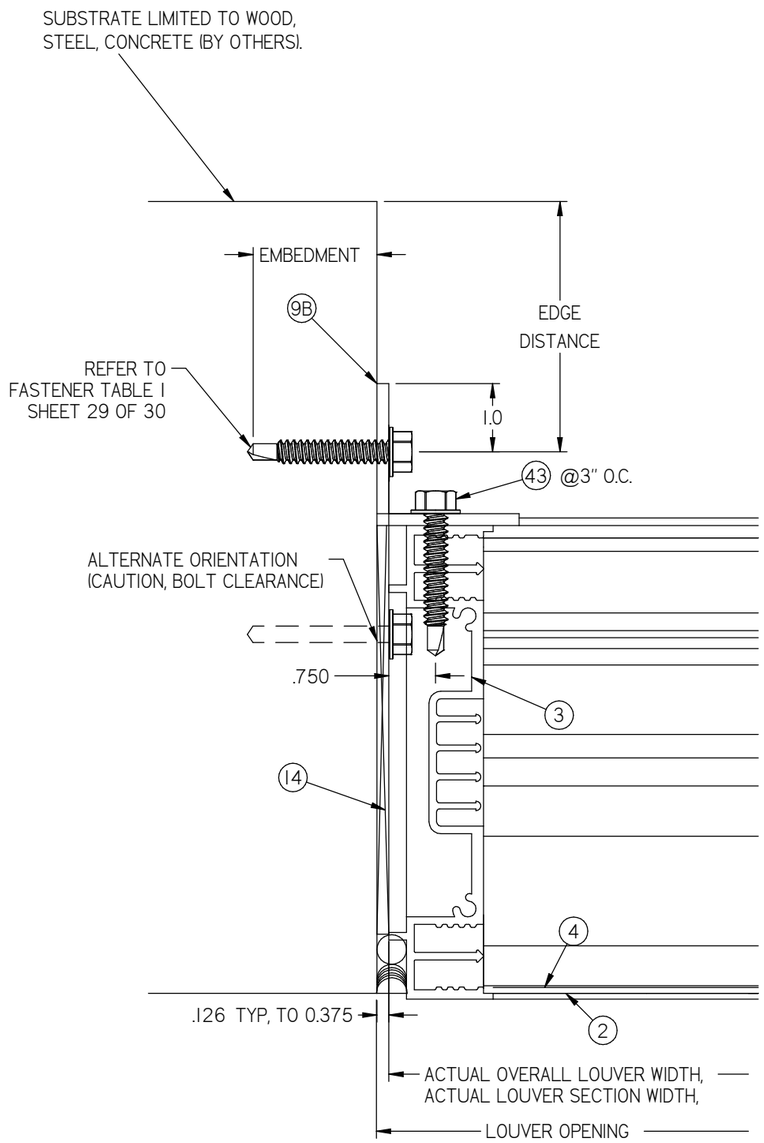

9 / 10/30 JAMB DETAIL

SUPPORT NOT ATTACHED AT HEAD AND SILL AND TO SUBSTRATE (WALL) AS TO ALLOW IT TO "FLOAT" DURING BLADE LOADING.

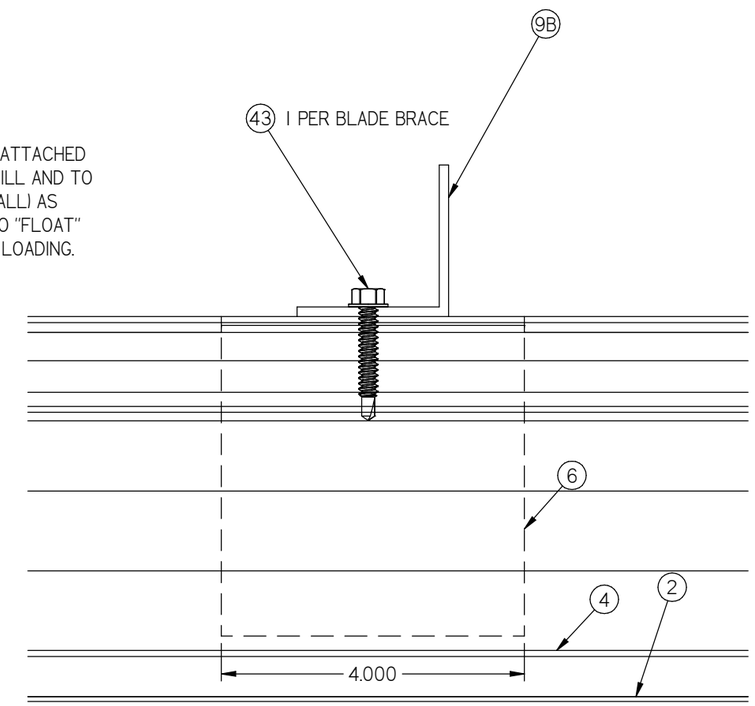

10 / 10/30 SUPPORT DETAIL

DWN BY: fcortinas
CHK BY: MAstourian
DATE: 9/18/2017
SCALE: NTS
SHEET: 10 OF 30
REV B
DWG. NO. 1605WDM

Nailor Industries Inc.
4714 Winfield Road Houston, TX 77039
TEL: 281-590-1172 FAX: 281-590-3086
www.nailor.com

TITLE: 1605WDM LOUVER COUNTINOUS ANGLE MOUNT JAMB DETAIL

WAYNE K. HELMILA
LICENSE
No. 59092
STATE OF FLORIDA
PROFESSIONAL ENGINEER

08/20/2024
COA: 9090

RICE
ENGINEERING
105 School Creek Trail
Luxemburg, WI 54217
Phone: (920) 617-1042
Fax: (920) 617-1100
www.rice-inc.com

Florida Firm No: F-01000005061
Certificate of Authorization: #9090
Wayne K. Helmila
Registration No: 59092

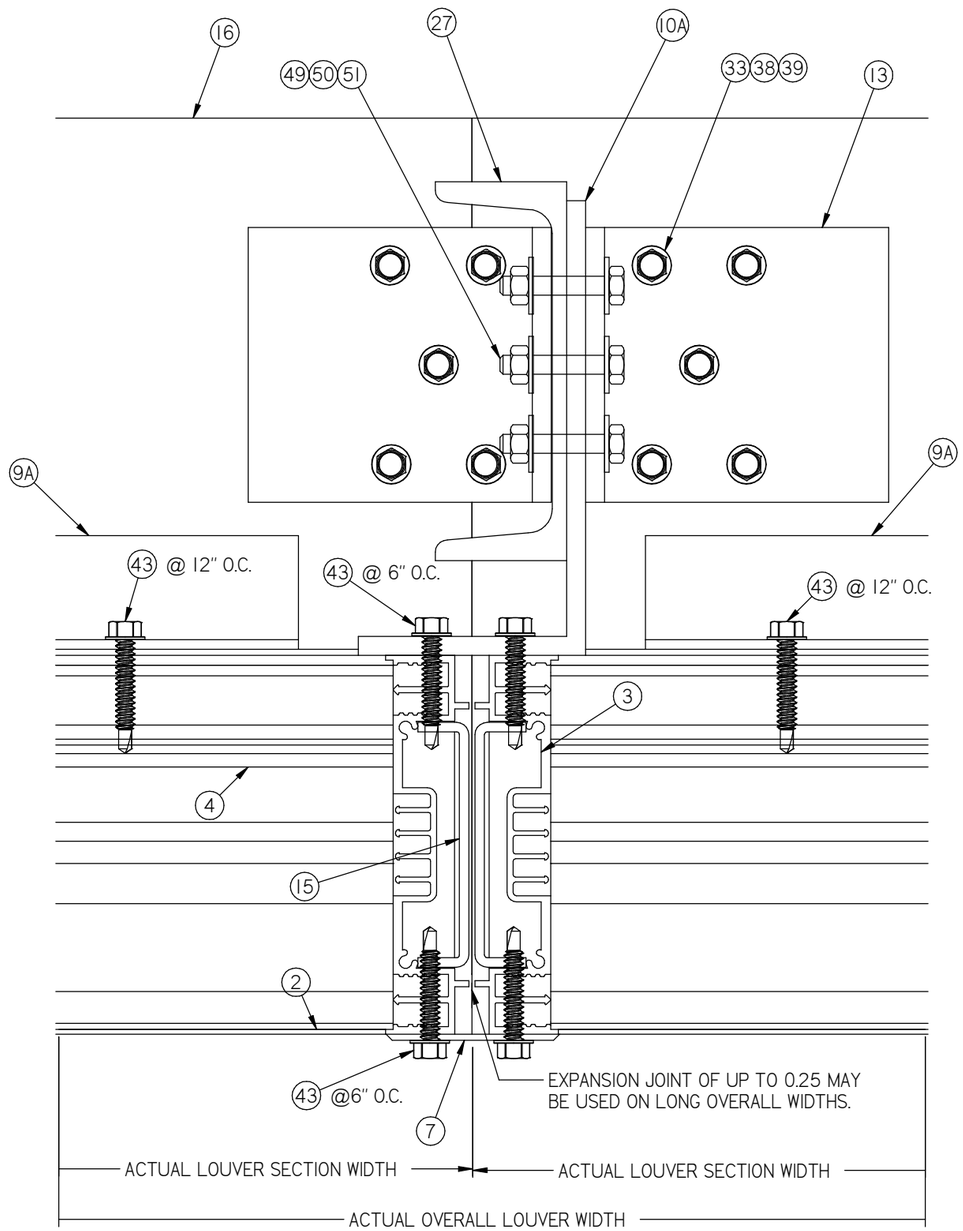

11A / 11/30 MULLION DETAIL
72" BLADE SLEEVE MOUNT
C6X8.2 STEEL CHANNEL
AND ALUM 6X3X1/4" ANGLE

PRODUCT REVISED
as complying with the Florida Building Code
NOA-No. 24-0516.05
Expiration Date 08/30/2028
By
Miami-Dade Product Control

DWN BY: fcortinas
CHK BY: MAstourian
DATE: 9/18/2017
SCALE: NTS
SHEET: 11 OF 30
REV B
DWG. NO. 1605WDM

Nailor Industries Inc.
4714 Winfield Road Houston, TX 77039
TEL: 281-590-1172 FAX: 281-590-3086
www.nailor.com

TITLE: 1605WDM LOUVER
FLANGE FRAME SLEEVE MOUNT
72" BLADE MULLION DETAIL

WAYNE K. HELMILA
LICENSE
No. 59092
STATE OF FLORIDA
PROFESSIONAL ENGINEER

08/20/2024
COA: 9090

RICE
ENGINEERING
105 School Creek Trail
Luxemburg, WI 54217
Phone: (920) 617-1042
Fax: (920) 617-1100
www.rice-inc.com

Florida Firm No: F-01000005061
Certificate of Authorization: #9090
Wayne K. Helmila
Registration No: 59092

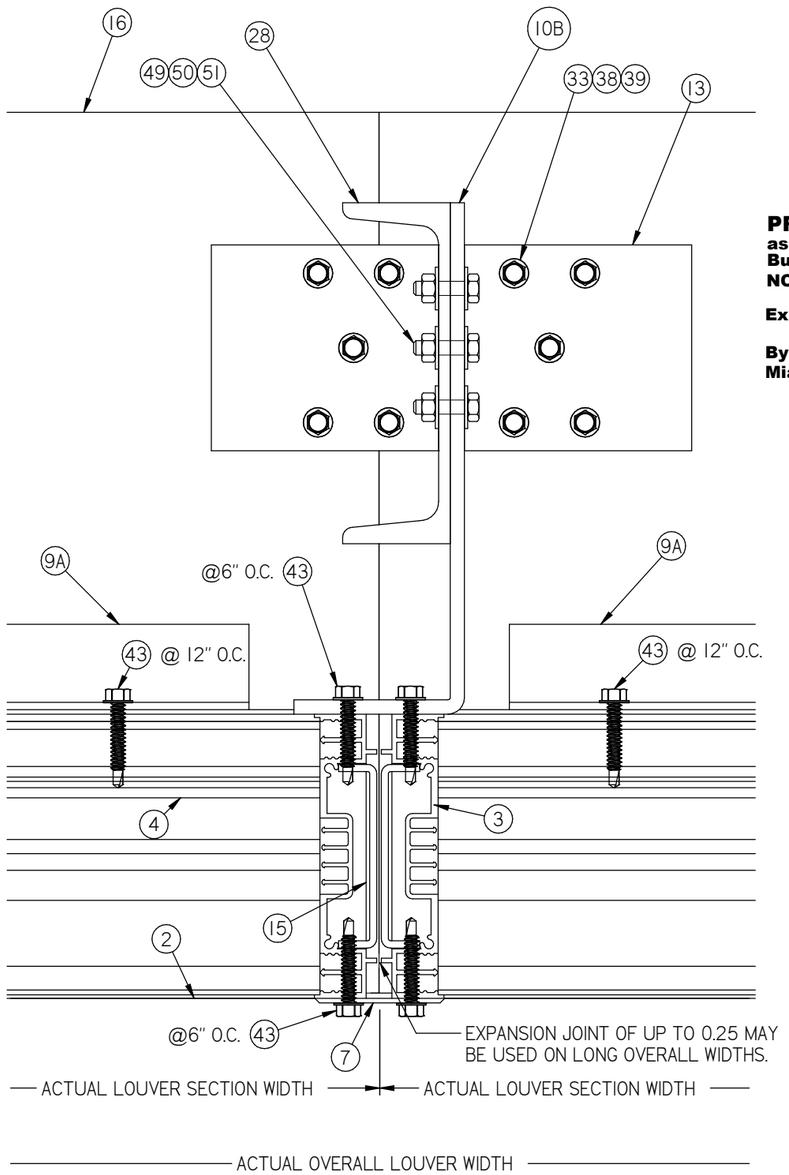

11B / 12/30 MULLION DETAIL
72" BLADE SLEEVE MOUNT
C8X18.75 STEEL CHANNEL
AND ALUM 9X3X1/4" ANGLE

PRODUCT REVISED
as complying with the Florida Building Code
NOA-No. 24-0516.05
Expiration Date 08/30/2028
By
Miami-Dade Product Control

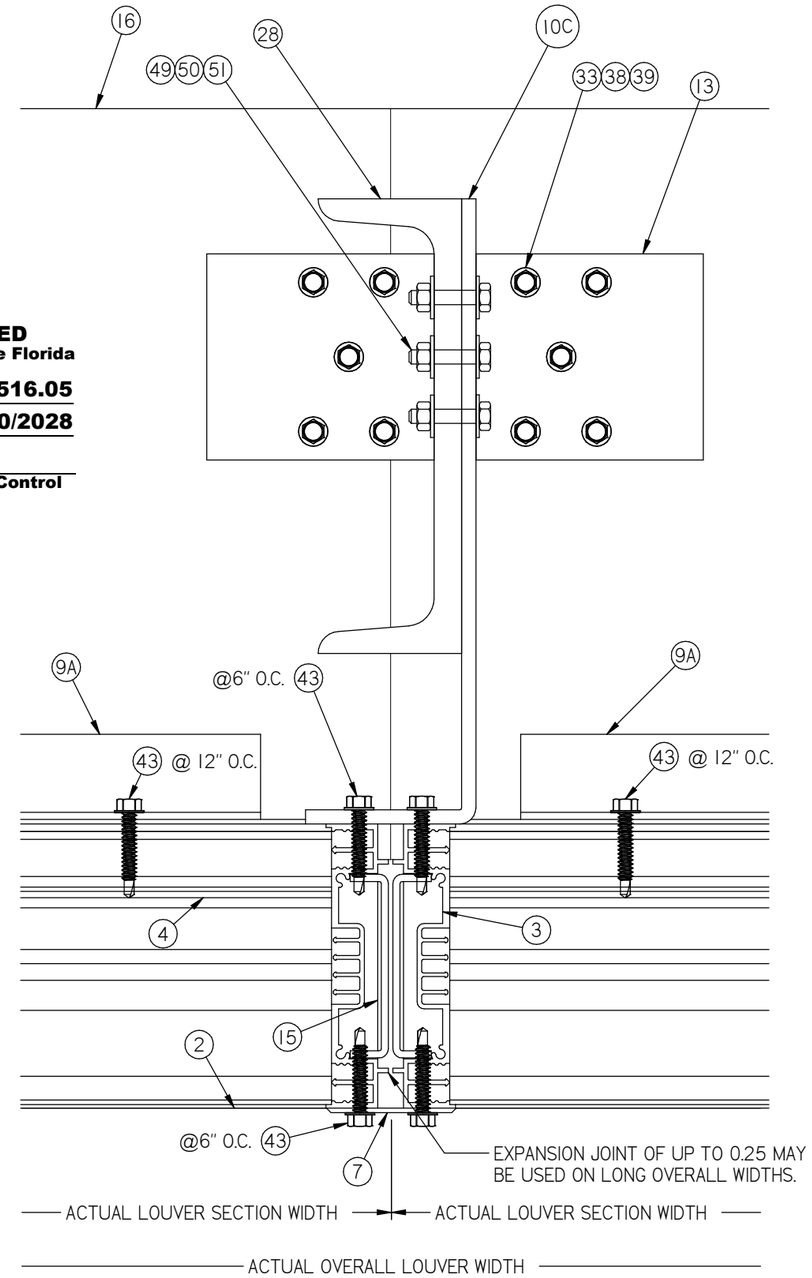

11C / 12/30 MULLION DETAIL
72" BLADE SLEEVE MOUNT
C8X18.75 STEEL CHANNEL
AND ALUM 11X3X1/4" ANGLE

REVISIONS:
REV B: ADDED PAGE DETAIL 11B, 11C

DWN BY: fcortinas
CHK BY: MAstourian
DATE: 9/18/2017
SCALE: NTS
SHEET: 12 OF 30
REV B
DWG. NO. 1605WDM

Nailor Industries Inc.
4714 Winfield Road Houston, TX 77039
TEL: 281-590-1172 FAX: 281-590-3086
www.nailor.com

TITLE: 1605WDM LOUVER
FLANGE FRAME SLEEVE MOUNT
72" BLADE MULLION DETAIL

WAYNE K. HELMILA
LICENSE
No. 59092
STATE OF FLORIDA
PROFESSIONAL ENGINEER

08/20/2024
COA: 9090

RICE
ENGINEERING
105 School Creek Trail
Luxemburg, WI 54217
Phone: (920) 617-1042
Fax: (920) 617-1100
www.rice-inc.com
Florida Firm No: F-01000005061
Certificate of Authorization: #9090
Wayne K. Helmila
Registration No: 59092

PRODUCT REVISED
as complying with the Florida Building Code
NOA-No. 24-0516.05
Expiration Date 08/30/2028
By
Miami-Dade Product Control

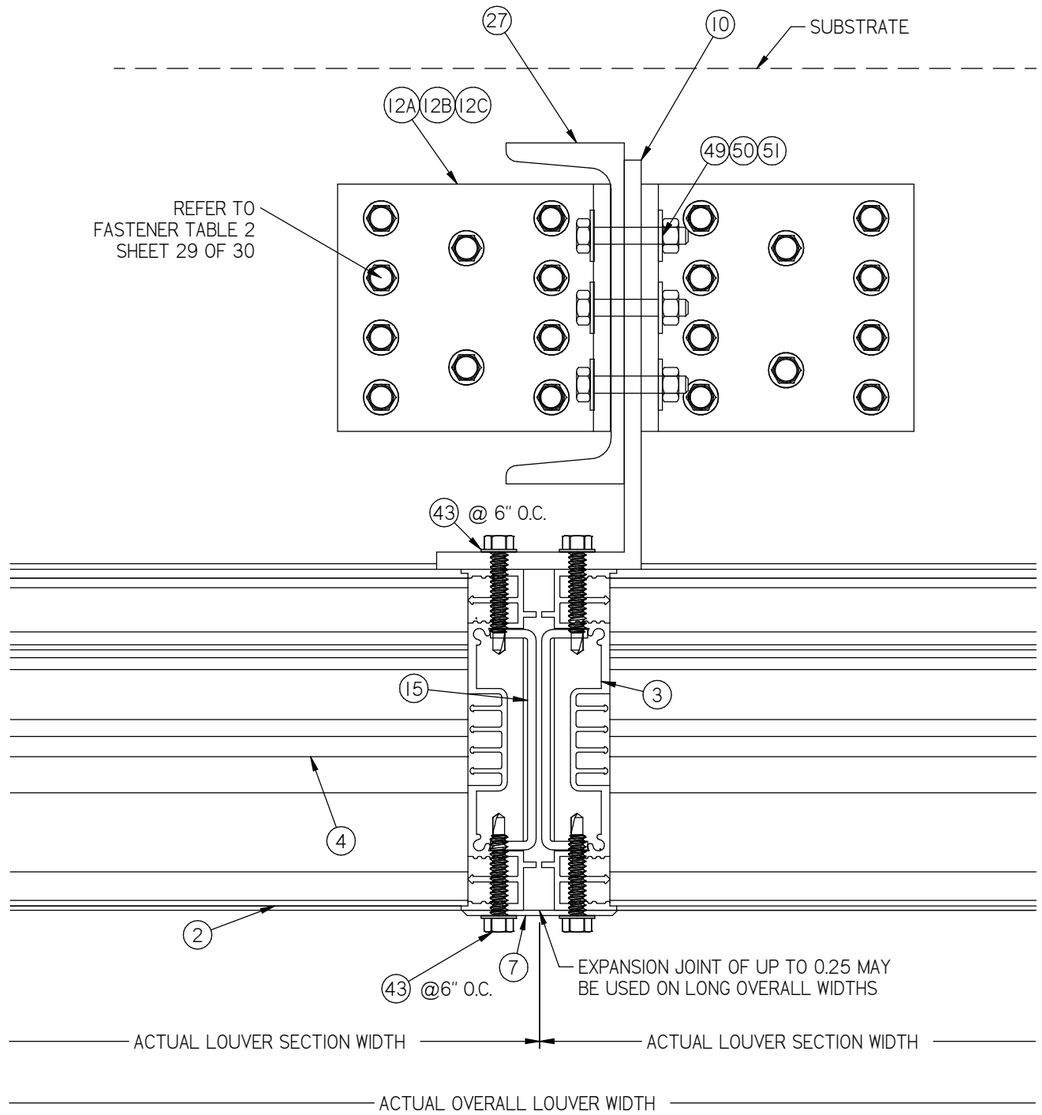

MULLION ANGLE DIRECT MOUNT (SHOWN HERE AT HEAD) IS FOR SUBSTATES WHERE MINIMUM FASTENER EDGE DISTANCE CAN BE ACHIEVED BY USE OF HOLES IN THE MULLION END CAP. DETAIL IS TYPICAL FOR BOTH HEAD AND SILL CONDITIONS WHEN APPLICABLE.

12A / 13/30 — MULLION DETAIL
72" BLADE DIRECT CHANNEL
C8 X 18.75 STEEL CHANNEL
ALUM L6 X 3 X 1/4

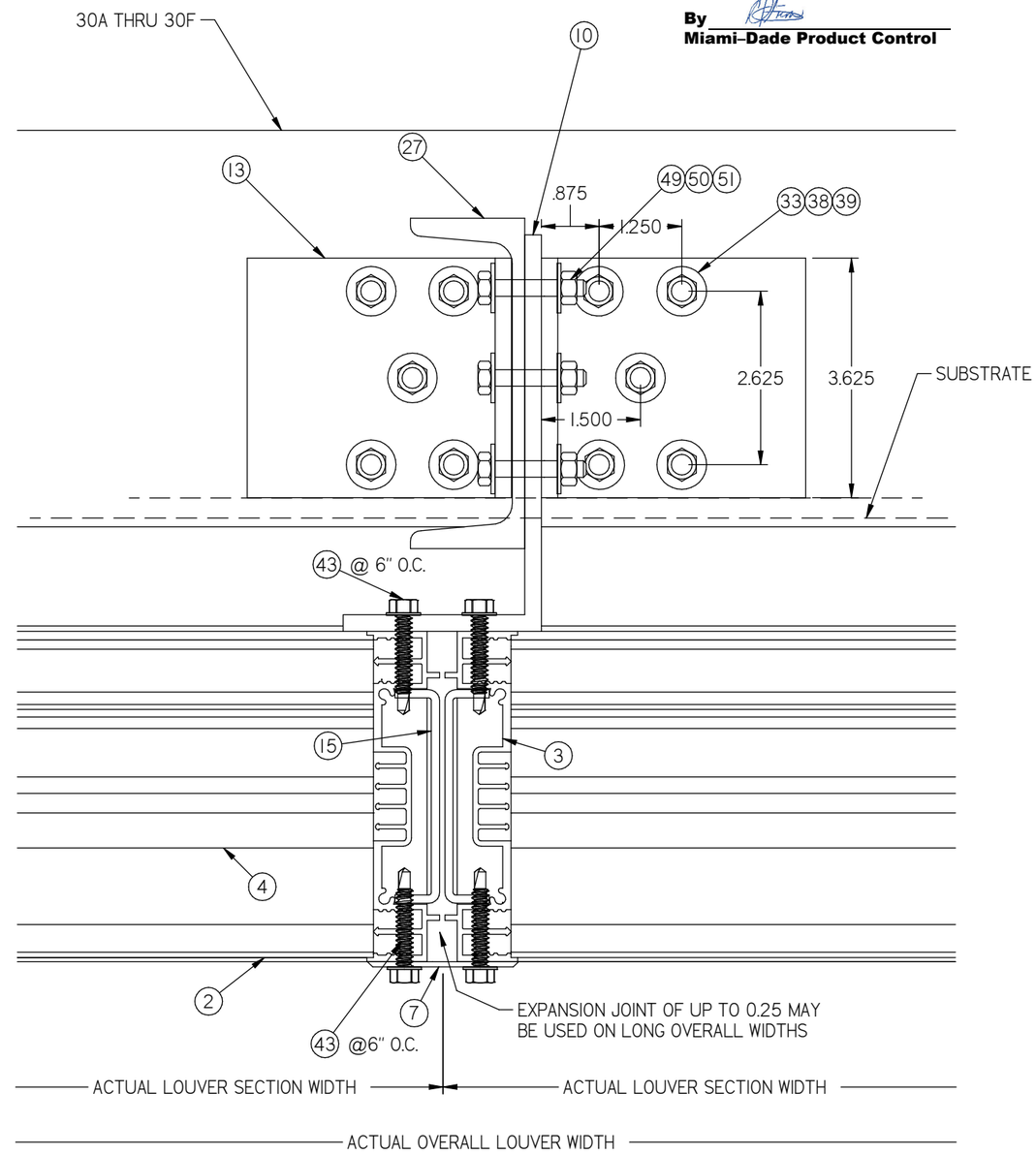

MULLION ANGLE BACK OF WALL MOUNT (SHOWN HERE AT SILL) IS FOR SUBSTRATES WHERE MINIMUM FASTENER EDGE DISTANCE CANNOT BE ACHIEVED BY USE OF HOLES IN THE MULLION END CAP. DETAIL IS TYPICAL FOR BOTH HEAD AND SILL CONDITIONS WHEN APPLICABLE.

12B / 13/30 — MULLION DETAIL
72" BLADE BACK OF WALL
MOUNT C8 X 18.75 STEEL
CHANNEL ALUM L6 X 3 X 1/4

REVISIONS:
REV B: RENUMBERED PAGE

DWN BY: fcortinas
CHK BY: MAstourian
DATE: 9/18/2017
SCALE: NTS
SHEET: 13 OF 30
REV B
DWG. NO. 1605WDM

Nailor Industries Inc.
4714 Winfield Road Houston, TX 77039
TEL: 281-590-1172 FAX: 281-590-3086
www.nailor.com

TITLE: 1605WDM LOUVER
COUNTINOUS ANGLE MOUNT
72" BLADE MULLION DETAIL

WAYNE K. HELMILA
LICENSE
No. 59092
STATE OF
FLORIDA
PROFESSIONAL ENGINEER

08/20/2024
COA: 9090

RICE
ENGINEERING
105 School Creek Trail
Luxemburg, WI 54217
Phone: (920) 617-1042
Fax: (920) 617-1100
www.rice-inc.com

Florida Firm No: F-01000005061
Certificate of Authorization: #9090
Wayne K. Helmila
Registration No: 59092

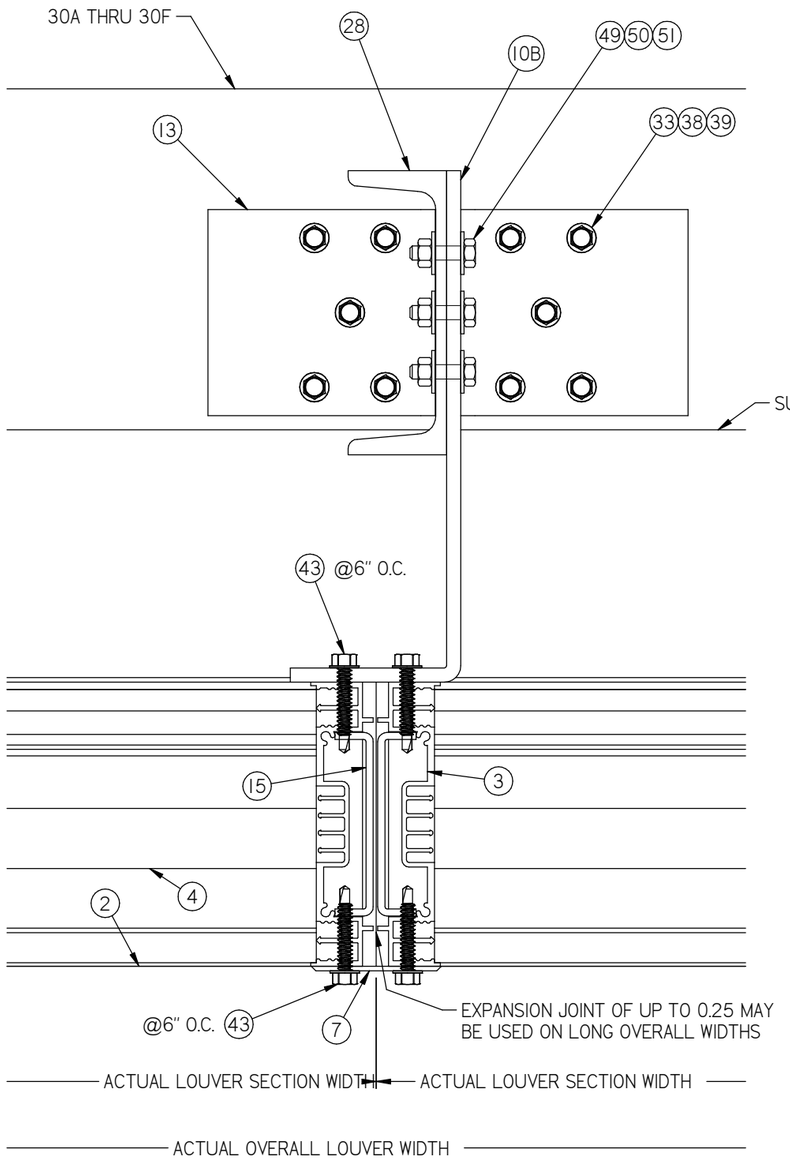

12C
14/30

MULLION DETAIL
72" BLADE BACK OF WALL
C8X18.75 STEEL CHANNEL
AND ALUM 9X3X1/4" ANGLE

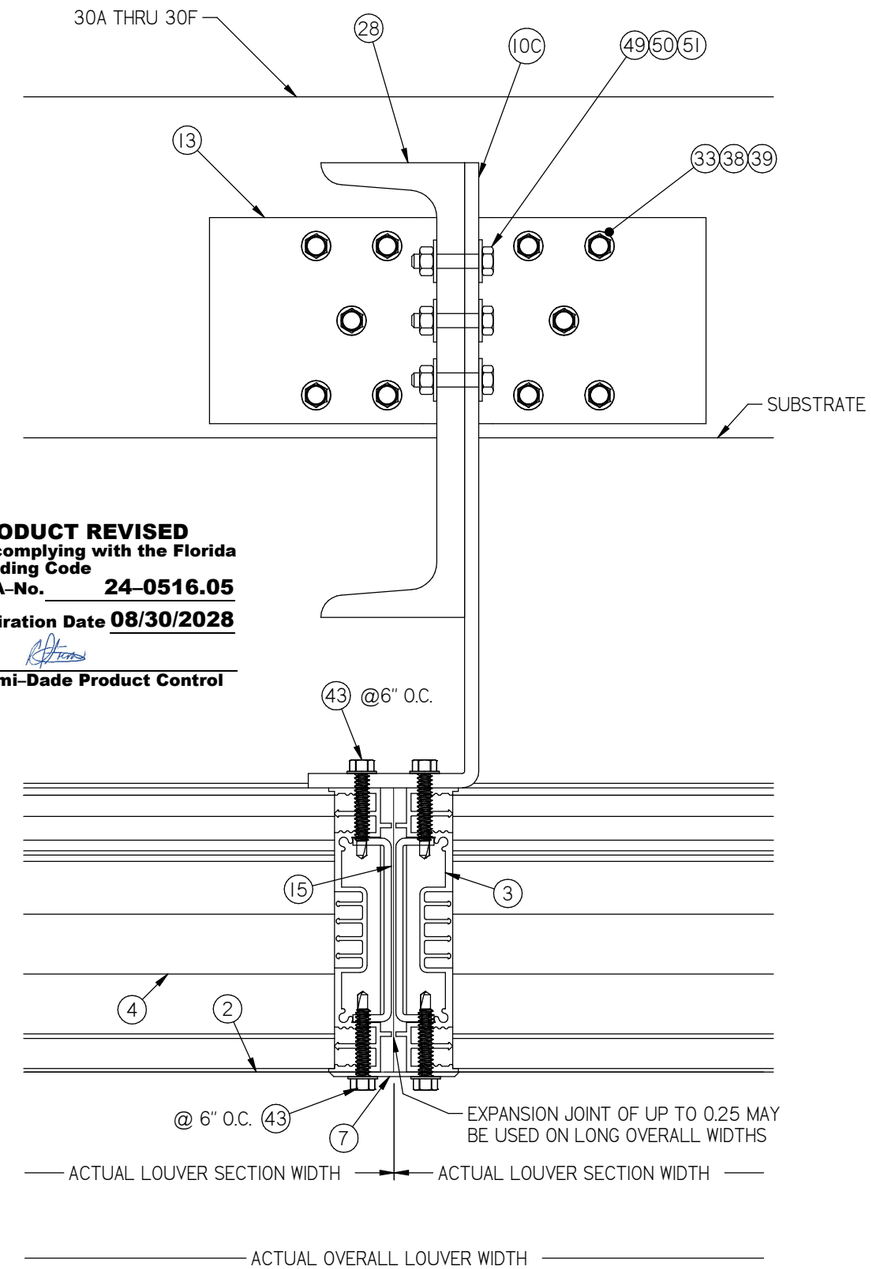

PRODUCT REVISED
as complying with the Florida Building Code
NOA-No. 24-0516.05
Expiration Date 08/30/2028
By
Miami-Dade Product Control

12D
14/30

MULLION DETAIL
72" BLADE BACK OF WALL
C8X18.75 STEEL CHANNEL
AND ALUM 11X3X1/4" ANGLE

REVISIONS:
REV B: ADDED PAGE DETAIL 12C, 12D

DWN BY: fcortinas
CHK BY: MAstourian
DATE: 9/18/2017
SCALE: NTS
SHEET: 14 OF 30
REV B
DWG. NO. 1605WDM

Nailor Industries Inc.
4714 Winfield Road Houston, TX 77039
TEL: 281-590-1172 FAX: 281-590-3086
www.nailor.com

TITLE: 1605WDM LOUVER
COUNTINOUS ANGLE MOUNT
72" BLADE MULLION DETAIL

WAYNE K. HELMILA
LICENSE
No. 59092
STATE OF FLORIDA
PROFESSIONAL ENGINEER

08/20/2024
COA: 9090

RICE
ENGINEERING
105 School Creek Trail
Luxemburg, WI 54217
Phone: (920) 617-1042
Fax: (920) 617-1100
www.rice-inc.com

Florida Firm No: F-01000005061
Certificate of Authorization: #9090
Wayne K. Helmila
Registration No: 59092

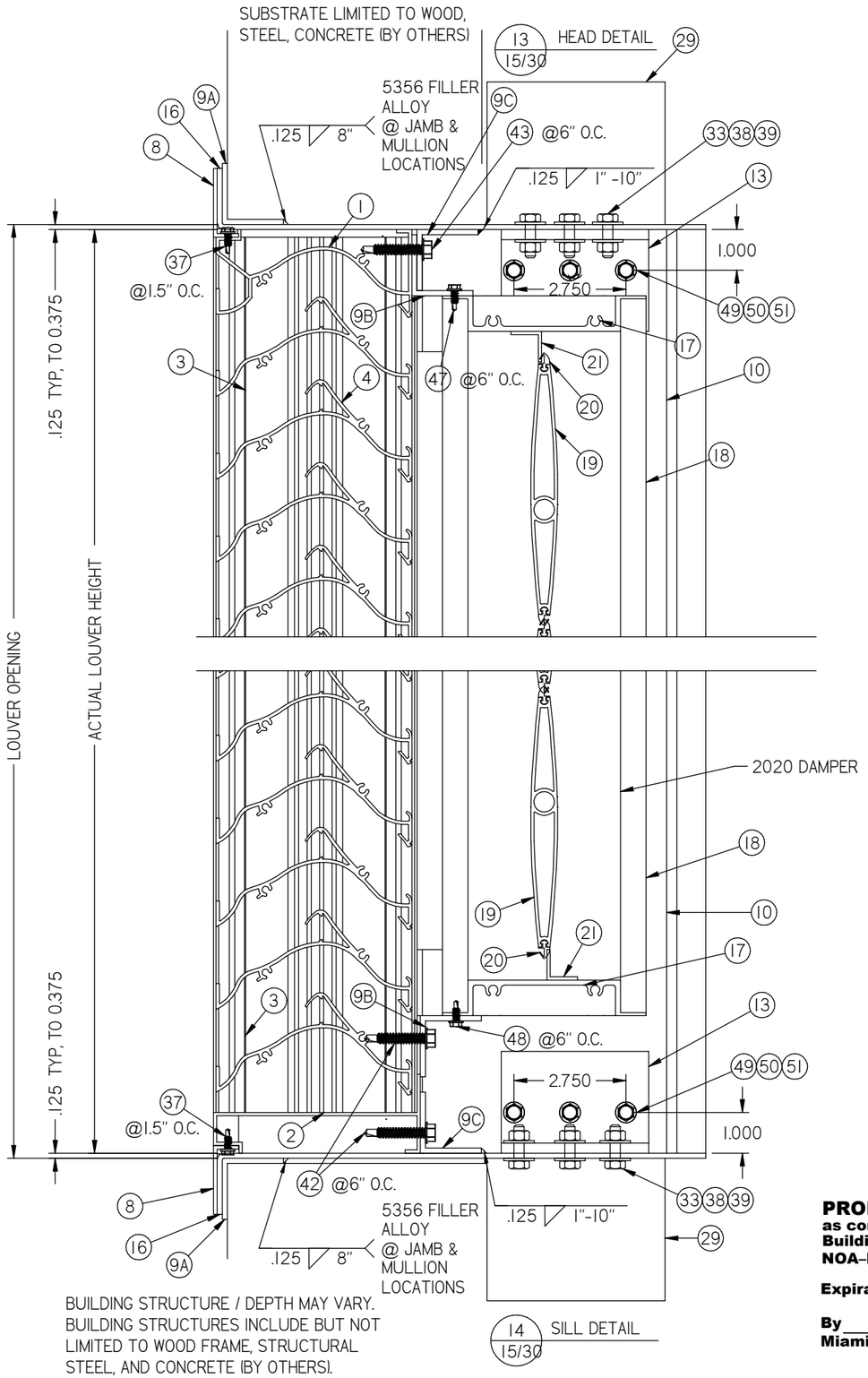

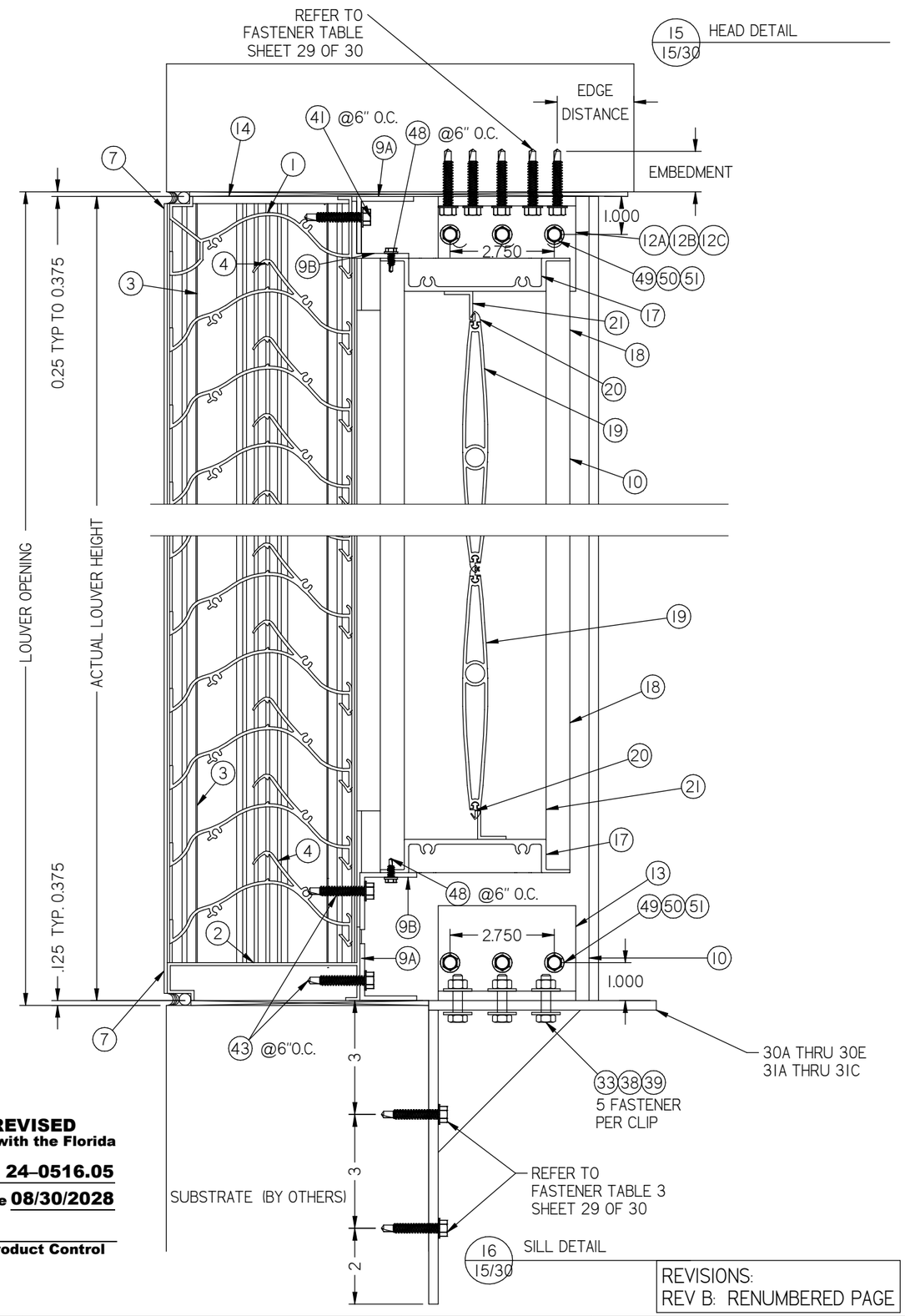

PRODUCT REVISED
as complying with the Florida Building Code
NOA-No. 24-0516.05
Expiration Date 08/30/2028
By
Miami-Dade Product Control

REVISIONS:
REV B: RENUMBERED PAGE

DWN BY: fcortinas
CHK BY: MAstourian
DATE: 9/18/2017
SCALE: NTS
SHEET: 15 OF 30
REV B
DWG. NO. 1605WDM

Nailor Industries Inc.
4714 Winfield Road Houston, TX 77039
TEL: 281-590-1172 FAX: 281-590-3086
www.nailor.com

TITLE: 1605WDM LOUVER / DAMPER FLANGE FRAME W/SLEEVE CONTINOUS ANGLE MOUNT HEAD & SILL DETAIL

WAYNE K. HELMILA
LICENSE
No. 59092
STATE OF FLORIDA
PROFESSIONAL ENGINEER
08/20/2024
COA: 9090

RICE
ENGINEERING
105 School Creek Trail
Luxemburg, WI 54217
Phone: (920) 617-1042
Fax: (920) 617-1100
www.rice-inc.com
Florida Firm No: F-01000005061
Certificate of Authorization: #9090
Wayne K. Helmila
Registration No: 59092

SUBSTRATE LIMITED TO:
CMU ONLY

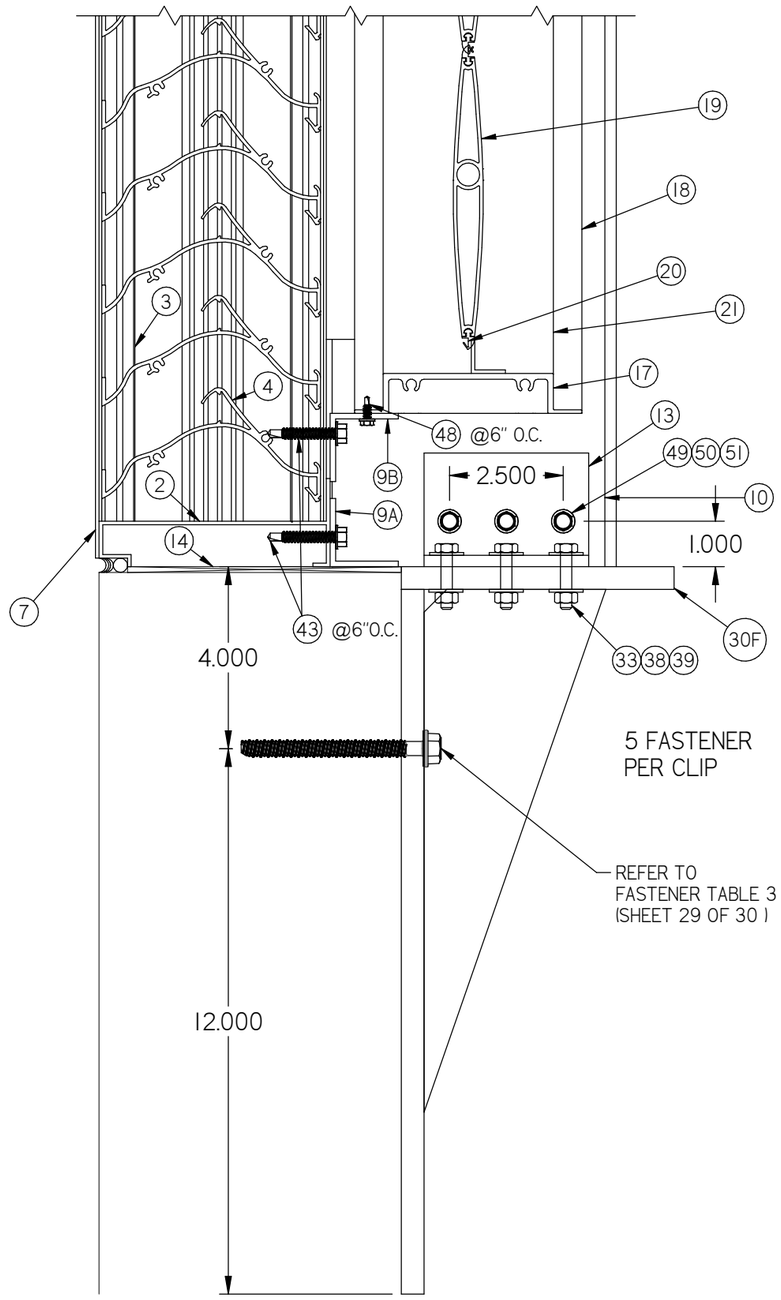

16/30 SILL DETAIL

PRODUCT REVISED
as complying with the Florida Building Code
NOA-No. 24-0516.05
Expiration Date 08/30/2028
By
Miami-Dade Product Control

REVISIONS:
REV B: ADDED PAGE CMU MULLION ANGLE DETAIL

DWN BY: fcortinas
CHK BY: MAstourian
DATE: 9/18/2017
SCALE: NTS
SHEET: 16 OF 30
REV B
DWG. NO. 1605WDM

Nailor Industries Inc.
4714 Winfield Road Houston, TX 77039
TEL: 281-590-1172 FAX: 281-590-3086
www.nailor.com

TITLE: 1605WDM LOUVER
CONTINUOUS ANGLE MOUNT
CMU MULLION ANGLE
HEAD & SILL DETAILS

WAYNE K. HELMILA
LICENSE
No. 59092
STATE OF
FLORIDA
PROFESSIONAL ENGINEER

08/20/2024
COA: 9090

RICE
ENGINEERING
105 School Creek Trail
Luxemburg, WI 54217
Phone: (920) 617-1042
Fax: (920) 617-1100
www.rice-inc.com

Florida Firm No: F-01000005061
Certificate of Authorization: #9090
Wayne K. Helmila
Registration No: 59092

PRODUCT REVISED
as complying with the Florida Building Code
NOA-No. 24-0516.05
Expiration Date 08/30/2028
By
Miami-Dade Product Control

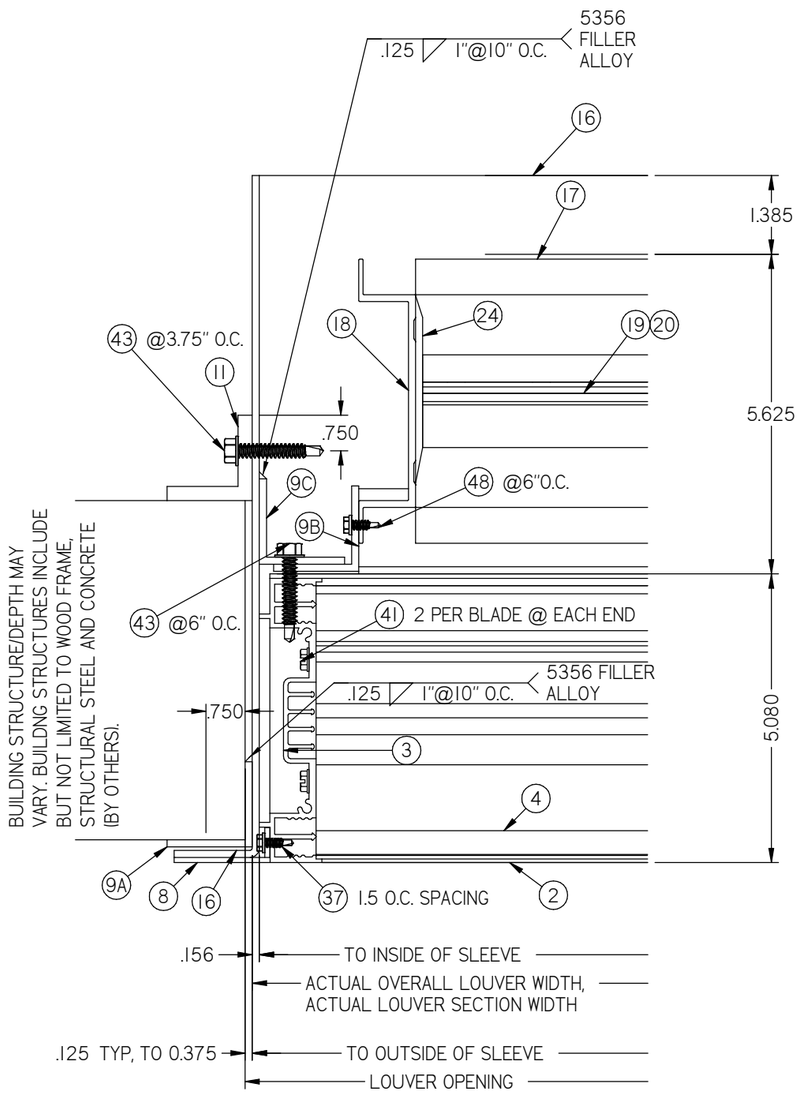

17 / 17/30 JAMB DETAIL

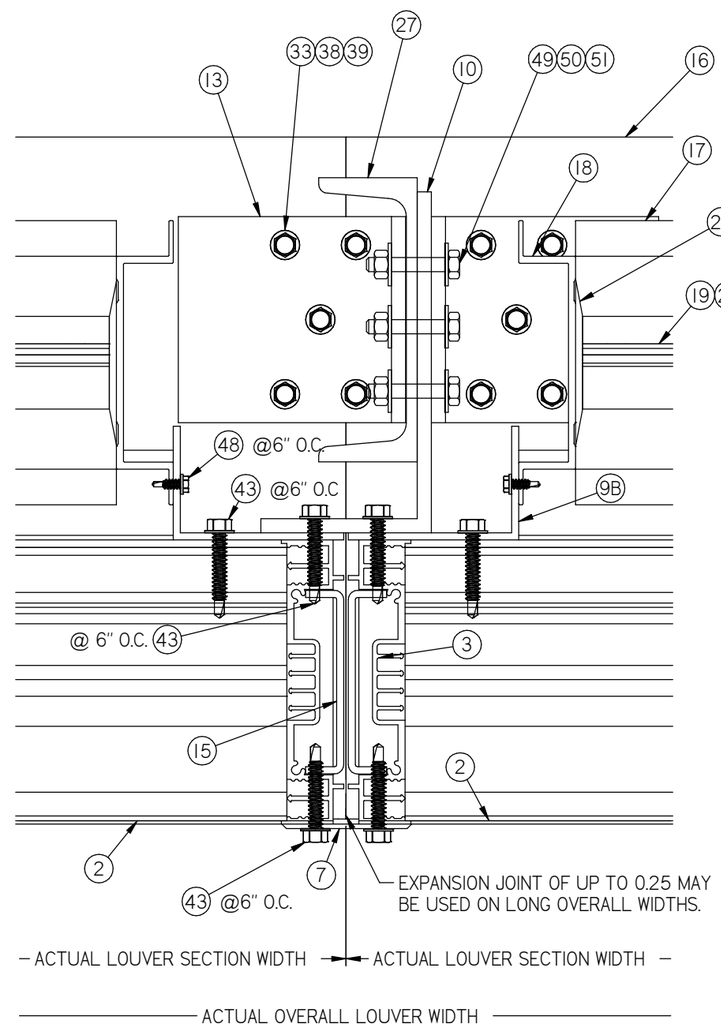

18A / 17/30 MULLION DETAIL
36" BLADE SLEEVE MOUNT
C6 X 8.2 STEEL CHANNEL
ALUM L6 X 3 X 1/4

REVISIONS:
REV B: RENUMBERED PAGE

DWN BY: fcortinas
CHK BY: MAstourian
DATE: 9/18/2017
SCALE: NTS
SHEET: 17 OF 30
REV B
DWG. NO. 1605WDM

Nailor Industries Inc.
4714 Winfield Road Houston, TX 77039
TEL: 281-590-1172 FAX: 281-590-3086
www.nailor.com

TITLE: 1605WDM LOUVER / DAMPER FLANGE FRAME SLEEVE MOUNT 36" BLADE JAMB AND MULLION DETAIL

WAYNE K. HELMILA
LICENSE
No. 59092
STATE OF FLORIDA
PROFESSIONAL ENGINEER
08/20/2024
COA: 9090

RICE
ENGINEERING
105 School Creek Trail
Luxemburg, WI 54217
Phone: (920) 617-1042
Fax: (920) 617-1100
www.rice-inc.com
Florida Firm No: F-01000005061
Certificate of Authorization: #9090
Wayne K. Helmila
Registration No: 59092

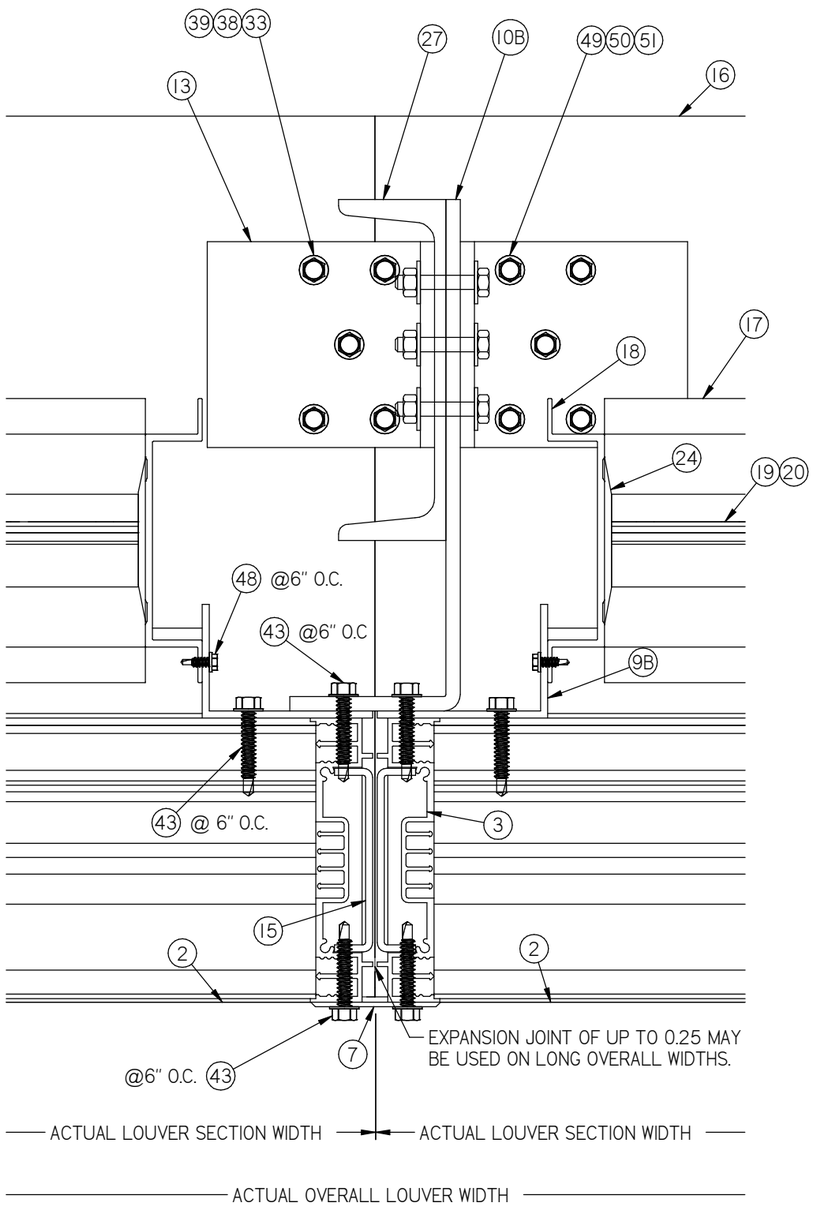

18B / 18/30 MULLION DETAIL
36" BLADE SLEEVE MOUNT
C6X8.2 STEEL CHANNEL
AND ALUM 9X3X1/4" ANGLE

PRODUCT REVISED
as complying with the Florida Building Code
NOA-No. 24-0516.05
Expiration Date 08/30/2028
By
Miami-Dade Product Control

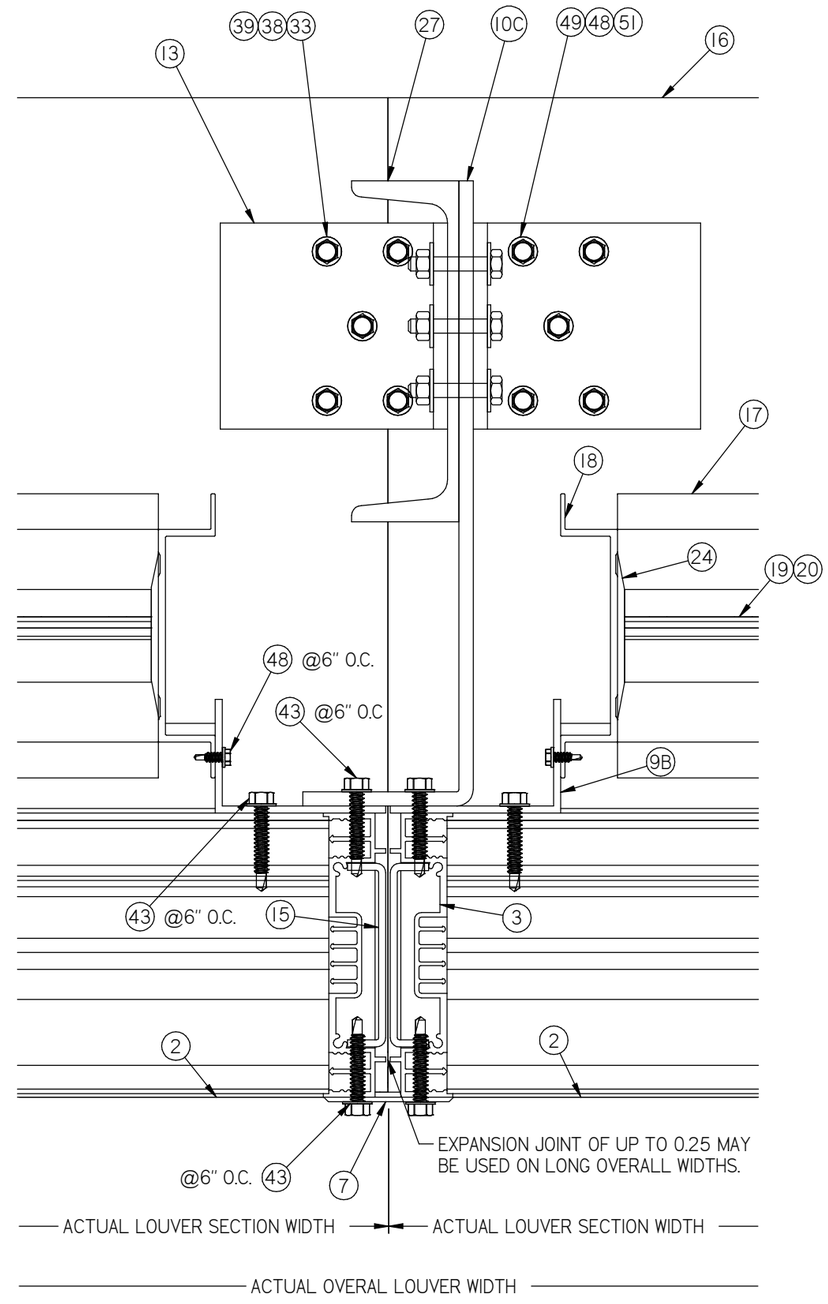

18C / 18/30 MULLION DETAIL
36" BLADE SLEEVE MOUNT
C6X8.2 STEEL CHANNEL
AND ALUM 11X3X1/4" ANGLE

REVISIONS:
REV B: ADDED PAGE MULLION DETAILS

DWN BY: fcortinas
CHK BY: MAstourian
DATE: 9/18/2017
SCALE: NTS
SHEET: 18 OF 30
REV B
DWG. NO. 1605WDM

Nailor Industries Inc.
4714 Winfield Road Houston, TX 77039
TEL: 281-590-1172 FAX: 281-590-3086
www.nailor.com

TITLE: 1605WDM LOUVER / DAMPER FLANGE FRAME SLEEVE MOUNT 36" BLADE MULLION DETAIL

WAYNE K. HELMILA
LICENSE
No. 59092
STATE OF FLORIDA
PROFESSIONAL ENGINEER

08/20/2024
COA: 9090

RICE
ENGINEERING
105 School Creek Trail
Luxemburg, WI 54217
Phone: (920) 617-1042
Fax: (920) 617-1100
www.rice-inc.com
Florida Firm No: F-01000005061
Certificate of Authorization: #9090
Wayne K. Helmila
Registration No: 59092

PRODUCT REVISED
as complying with the Florida Building Code
NOA-No. 24-0516.05
Expiration Date 08/30/2028
By
Miami-Dade Product Control

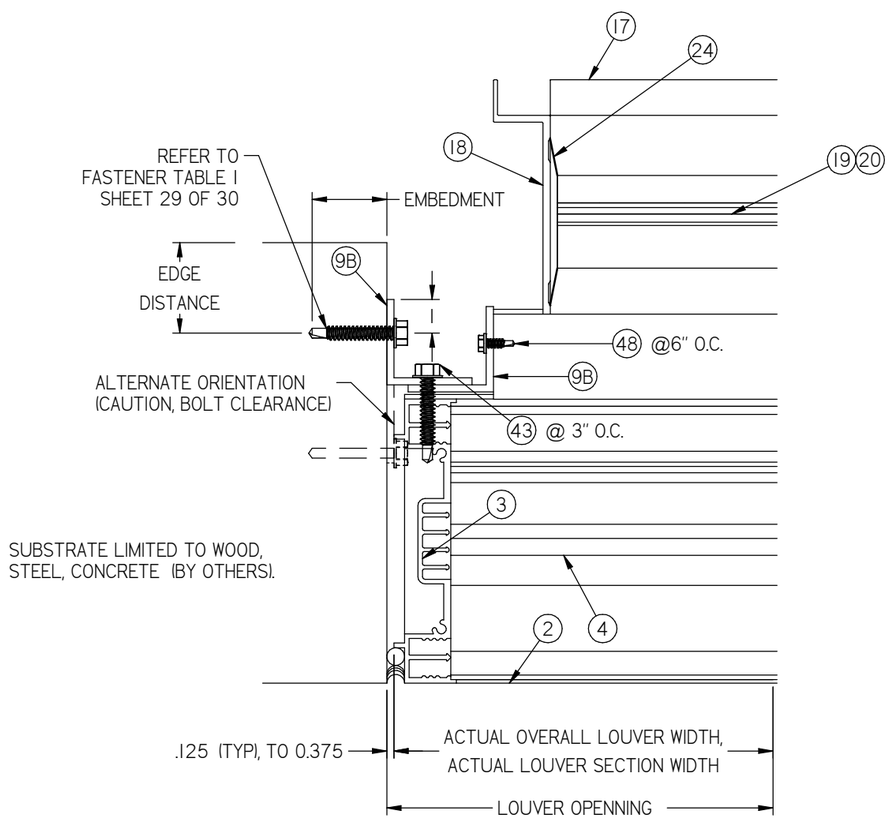

19 / 19/30 JAMB DETAIL

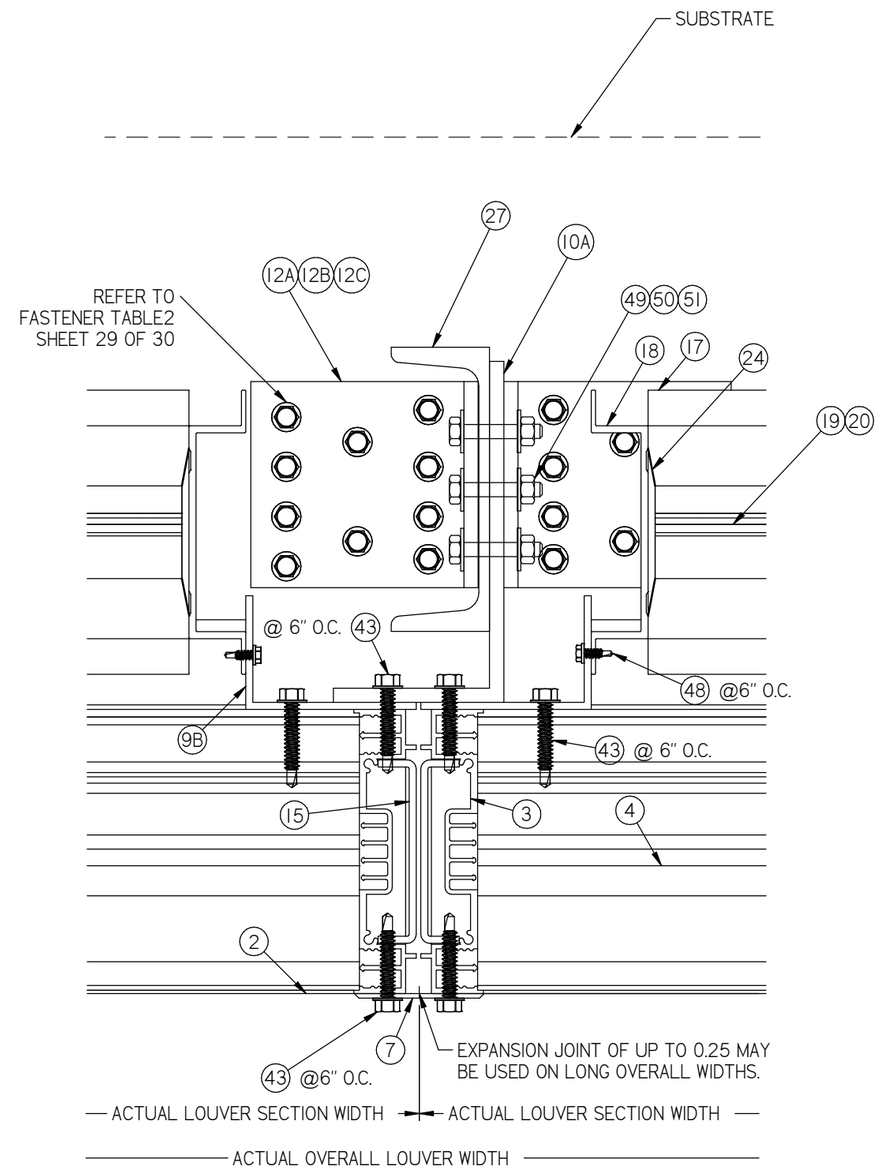

20A / 19/30 MULLION ANGLE DIRECT MOUNT DETAIL

REVISIONS:
REV B: RENUMBERED PAGE

DWN BY: fcortinas
CHK BY: MAstourian
DATE: 9/18/2017
SCALE: NTS
SHEET: 19 OF 30
REV B
DWG. NO. 1605WDM

Nailor Industries Inc.
4714 Winfield Road Houston, TX 77039
TEL: 281-590-1172 FAX: 281-590-3086
www.nailor.com

TITLE: 1605WDM LOUVER / DAMPER CONTINUOUS ANGLE MOUNT JAMB AND MULLION DETAIL

WAYNE K. HELMILA
LICENSE
No. 59092
STATE OF FLORIDA
PROFESSIONAL ENGINEER
08/20/2024
COA: 9090

RICE
ENGINEERING
105 School Creek Trail
Luxemburg, WI 54217
Phone: (920) 617-1042
Fax: (920) 617-1100
www.rice-inc.com

Florida Firm No: F-01000005061
Certificate of Authorization: #9090
Wayne K. Helmila
Registration No: 59092

PRODUCT REVISED
as complying with the Florida Building Code
NOA-No. 24-0516.05
Expiration Date 08/30/2028
By
Miami-Dade Product Control

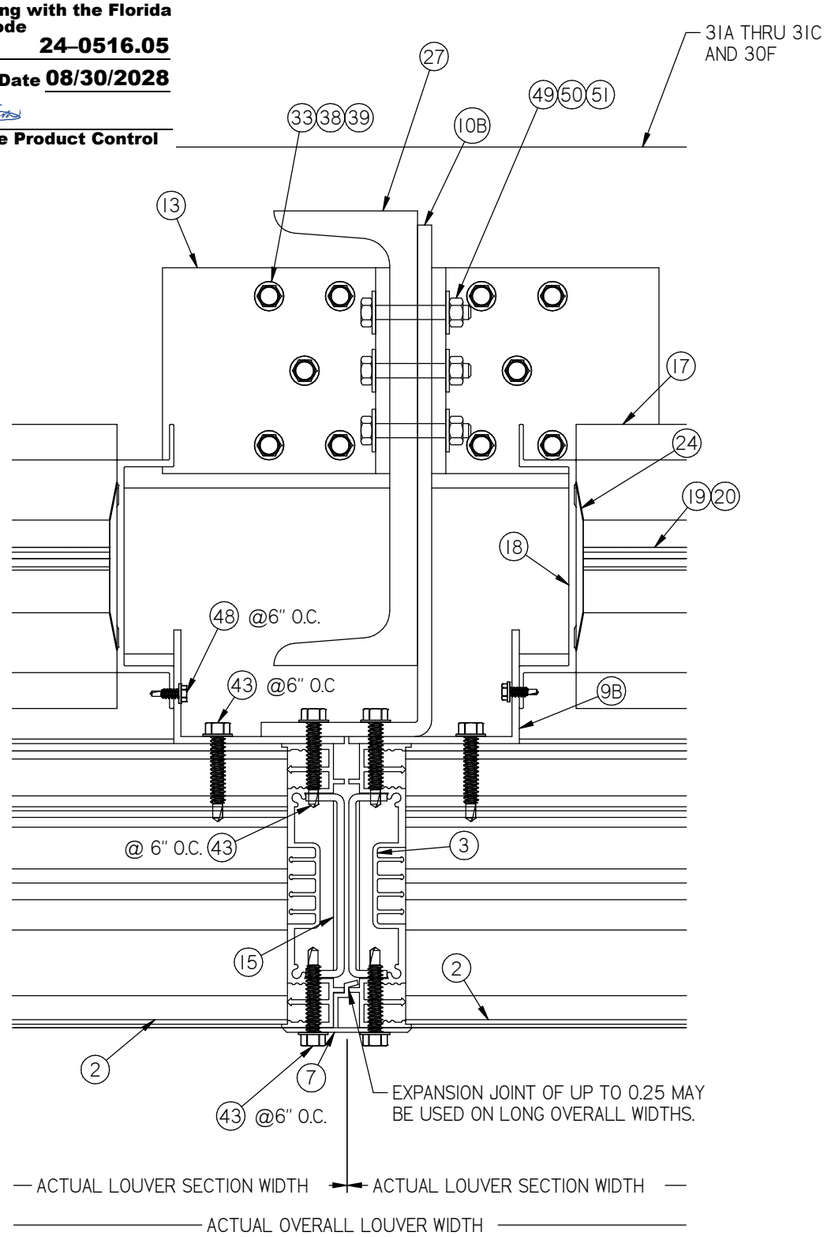

20B / 20/30 MULLION DETAIL
36" BLADE BACK OF WALL MOUNT
C6X8.2 STEEL CHANNEL
AND ALUM 9X3X1/4" ANGLE

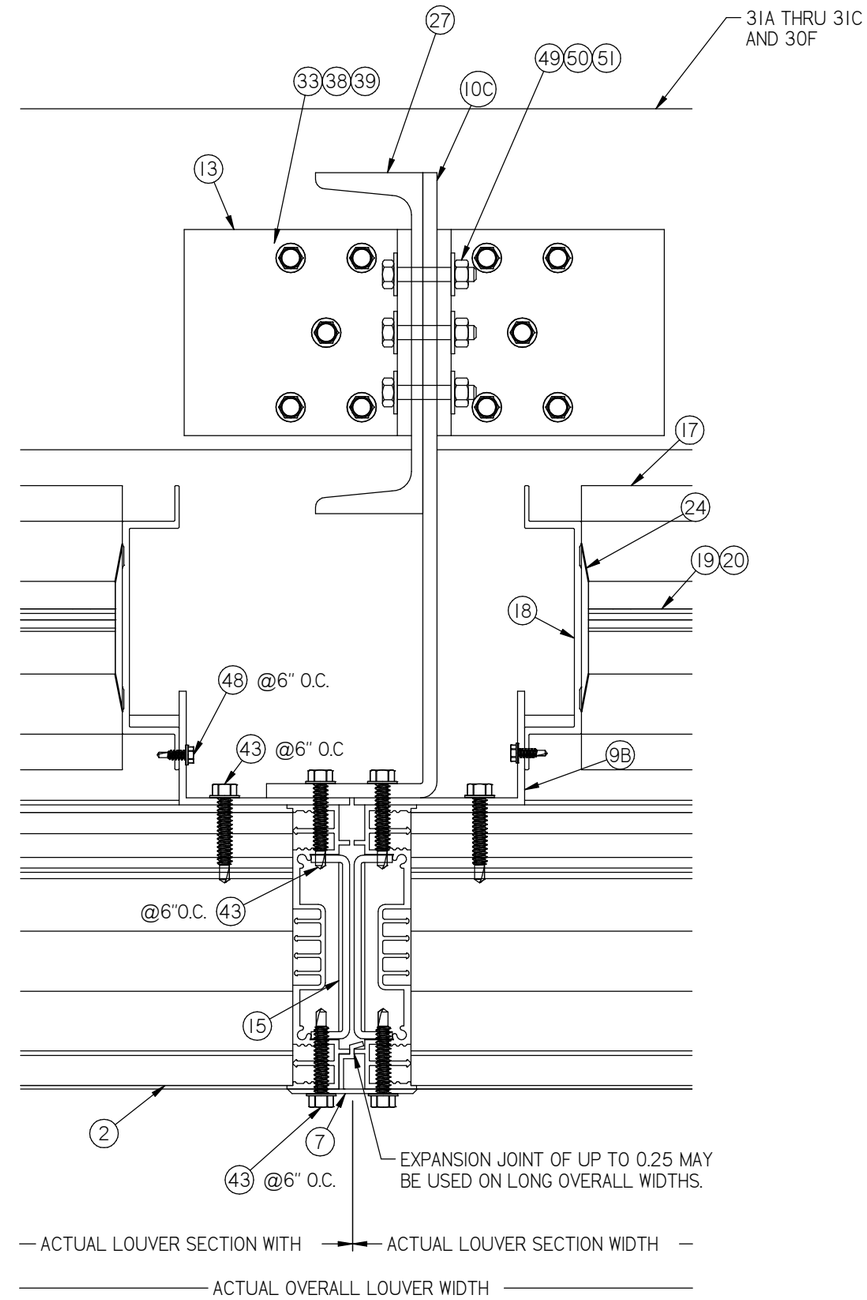

20C / 20/30 MULLION DETAIL
36" BLADE BACK OF WALL MOUNT
C6X8.2 STEEL CHANNEL
AND ALUM 11X3X1/4" ANGLE

REVISIONS:
REV B: ADDED PAGE MULLION DETAILS

DWN BY: fcortinas
CHK BY: MAstourian
DATE: 9/18/2017
SCALE: NTS
SHEET: 20 OF 30
REV B
DWG. NO. 1605WDM

Nailor Industries Inc.
4714 Winfield Road Houston, TX 77039
TEL: 281-590-1172 FAX: 281-590-3086
www.nailor.com

TITLE: 1605WDM LOUVER / DAMPER
CONTINUOUS ANGLE MOUNT
36" BLADE MULLION DETAIL

WAYNE K. HELMILA
LICENSE
No. 59092
STATE OF FLORIDA
PROFESSIONAL ENGINEER

08/20/2024
COA: 9090

RICE
ENGINEERING
105 School Creek Trail
Luxemburg, WI 54217
Phone: (920) 617-1042
Fax: (920) 617-1100
www.rice-inc.com
Florida Firm No: F-01000005061
Certificate of Authorization: #9090
Wayne K. Helmila
Registration No: 59092

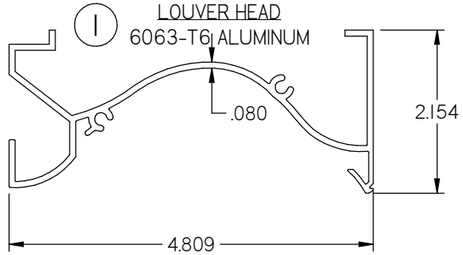

1 LOUVER HEAD
6063-T6 ALUMINUM

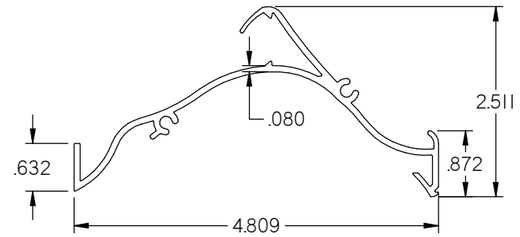

4 LOUVER BLADE
6063-T6 ALUMINUM

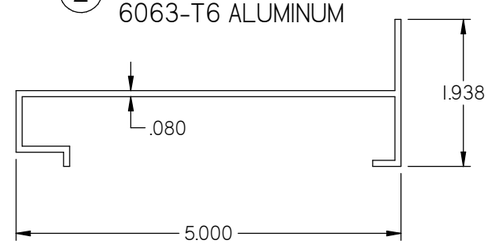

2 LOUVER SILL
6063-T6 ALUMINUM

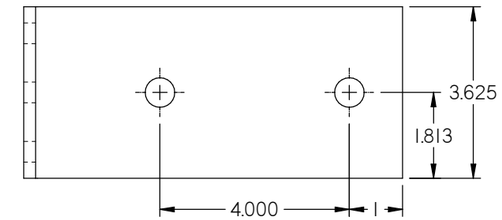

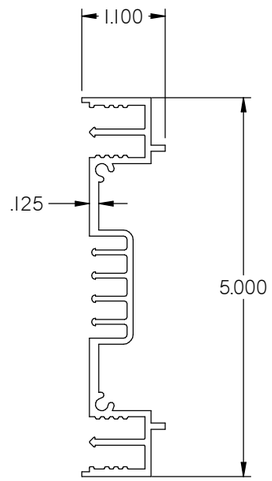

3 LOUVER JAMB
6063-T6 ALUMINUM

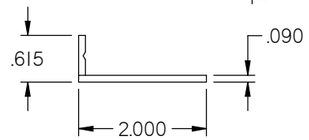

8 LOUVER FLANGE
6063-T6 ALUMINUM

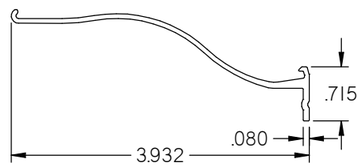

6 LOUVER BLADE BRACE
6063-T6 ALUMINUM

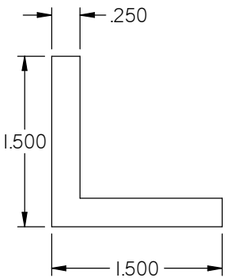

11 LOUVER SLEEVE MOUNT ANGLE
6063-T6 ALUMINUM

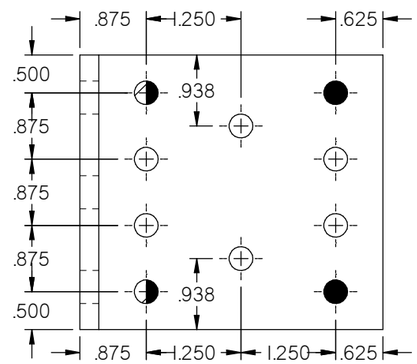

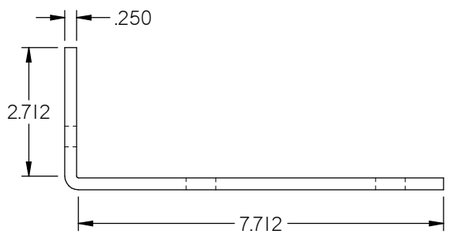

12C MULLION MOUNTING ANGLE
3.00 X 8.00X 0.375 X 3.625 LONG
6061-T6 ALUM. ANGLE
FOR (2) 5/8 " HILTI KWIK BOLT TZ2 SS 304 ANCHOR

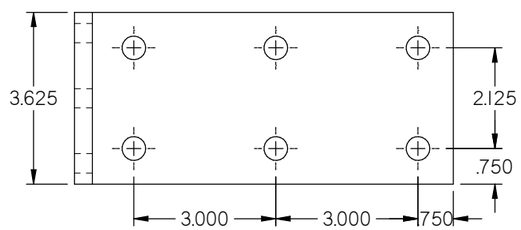

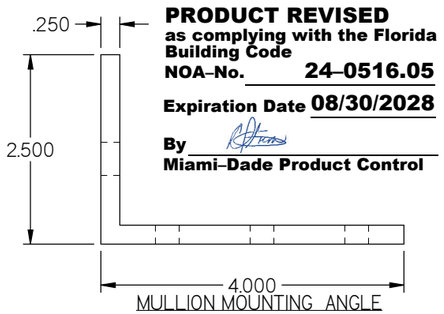

PRODUCT REVISED
as complying with the Florida Building Code
NOA-No. 24-0516.05
Expiration Date 08/30/2028
By
Miami-Dade Product Control

12A MULLION MOUNTING ANGLE
4.00 X 2.50 X 0.25 X 3.625 LONG
6061-T6 ALUM. ANGLE
FOR (10) 1/4" DIA SS LAG SCREW

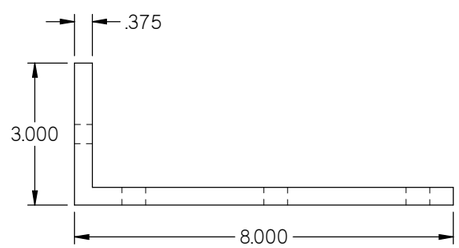

12B MULLION MOUNTING ANGLE
3.00 X 8.00X 0.375 X 3.625 LONG
6061-T6 ALUM. ANGLE
FOR (6) 1/2 " DIA SS. LAG SCREW

FOR (4) 1/4" DIA SS BI-FLEX SCREWS — INSTALLATION HOLES

FOR (2) 5/16" DIA DRIL-FLEX SCREWS — INSTALLATION HOLES

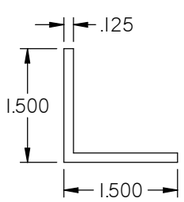

9A LOUVER SLEEVE
ATTACHMENT ANGLE (CONT.)
6063-T6 ALUMINUM

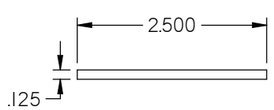

7 MULLION BAR COVER
6063-T6 ALUMINUM

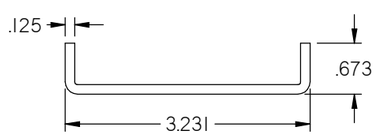

15 MULLION STIFFNER ALUM.
6063-T6 ALUMINUM

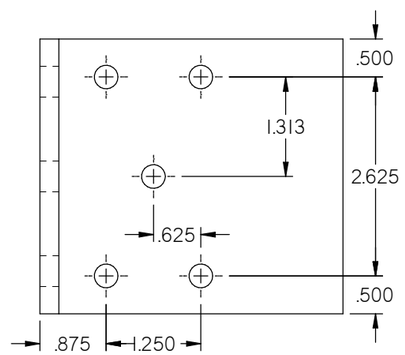

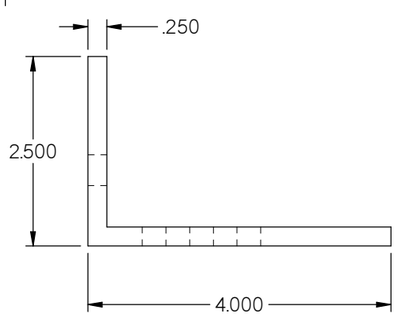

13 SLEEVE ATTACHMENT ANGLE
4.00X 2.50 X 0.25 X 3.625 LONG
6061-T6 ALUM. ANGLE
FOR (5) 1/4" DIA SS 18-8 CAP SCREW

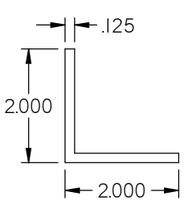

9B LOUVER SLEEVE
ATTACHMENT ANGLE (CONT.)
6063-T6 ALUMINUM

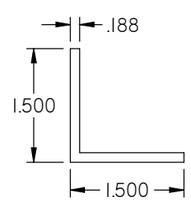

9C LOUVER SLEEVE
ATTACHMENT ANGLE (CONT.)
6063-T6 ALUMINUM

REVISIONS:
REV B: RENUMBERED PAGE
REMOVED ITEM# 10

DWN BY: fcortinas	CHK BY: MAstourian	SHEET: 21 OF 30	REV B
DATE: 9/18/2017	SCALE: NTS		DWG. NO. 1605WDM

Nailor Industries Inc.
4714 Winfield Road Houston, TX 77039
TEL: 281-590-1172 FAX: 281-590-3086
www.nailor.com

TITLE: 1605WDM LOUVER, W/ AND W/O DAMPER SLEEVE/CONTINUOUS MOUNT PART PROFILES

WAYNE K. HELMILA
LICENSE
No. 59092
STATE OF FLORIDA
PROFESSIONAL ENGINEER

08/20/2024
COA: 9090

RICE
ENGINEERING
105 School Creek Trail
Luxemburg, WI 54217
Phone: (920) 617-1042
Fax: (920) 617-1100
www.rice-inc.com

Florida Firm No: F-01000005061
Certificate of Authorization: #9090
Wayne K. Helmila
Registration No: 59092

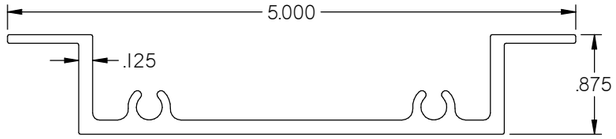

17 DAMPER HEAD/SILL
6063-T6 ALUMINUM

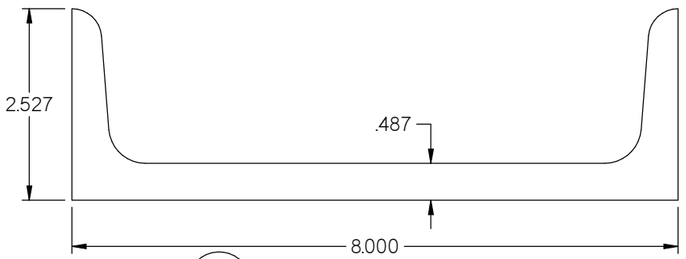

27B LOUVER BRACE SUPPORT CHANNEL
C8X18.75 ASTM A36 STEEL CHANNEL

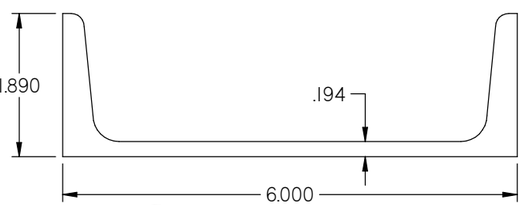

27A LOUVER BRACE SUPPORT CHANNEL
C6X8.2 ASTM A36 STEEL CHANNEL

22 DAMPER BUSHING
MATERIAL VARIES

23 DAMPER LINKAGE BAR
MATERIAL VARIES

24 DAMPER JAMB SEAL
STAINLESS STEEL

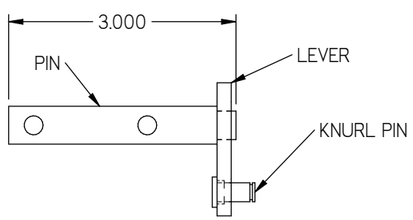

25 NON DRIVE DAMPER AXEL ASM
MATERIAL VARIES

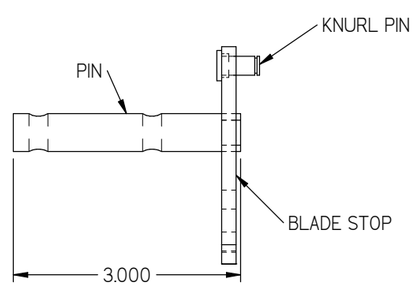

26 DRIVE SIDE DAMPER AXLE ASM
MATERIAL VARIES

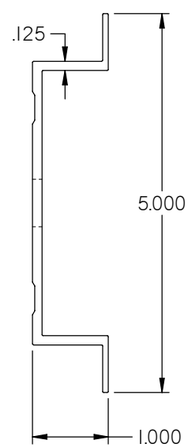

18 DAMPER JAMB
6063-T6 ALUMINUM

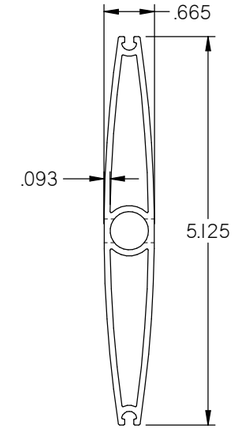

19 DAMPER BLADE
6063-T6 ALUMINUM

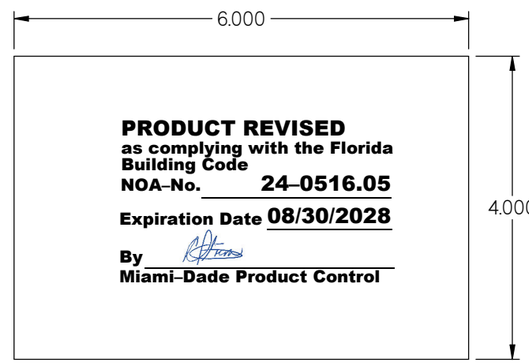

PRODUCT REVISED
as complying with the Florida Building Code
NOA-No. 24-0516.05
Expiration Date 08/30/2028
By
Miami-Dade Product Control

14 ALUMNUM SUPPORT SHIM
1/4"THICK
5052-H32 ALUMINUM

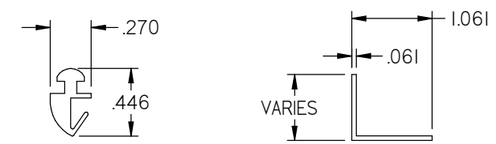

20 DAMPER BLADE SEAL
MATERIAL VARIES

21 DAMPER TOP/BOTTOM CLOSUER
ALUMINUM

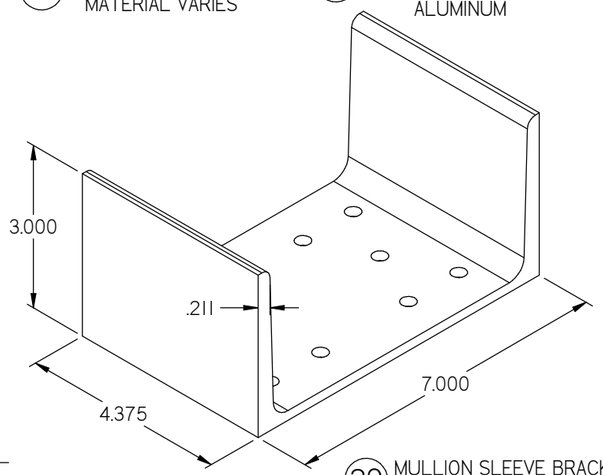

29 MULLION SLEEVE BRACKET
6061-T6 ALUMINUM

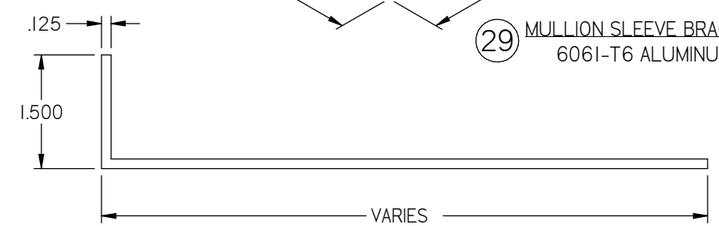

16 FORMED SLEEVE ALUM.
5052-H32 ALUMINUM

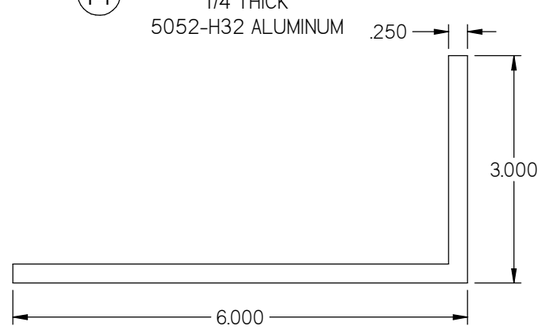

10A LOUVER SUPPORT ANGLE
6063-T6 ALUMINUM

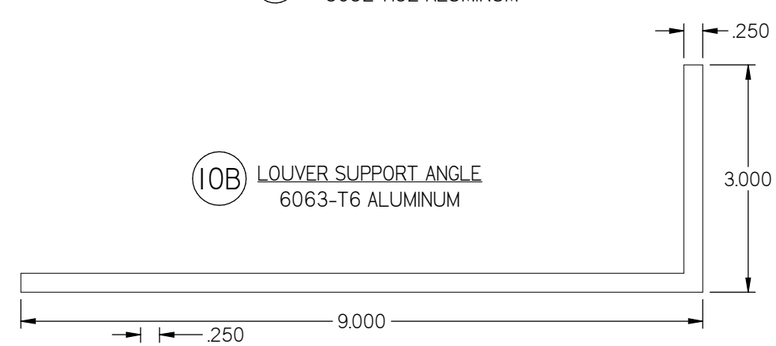

10B LOUVER SUPPORT ANGLE
6063-T6 ALUMINUM

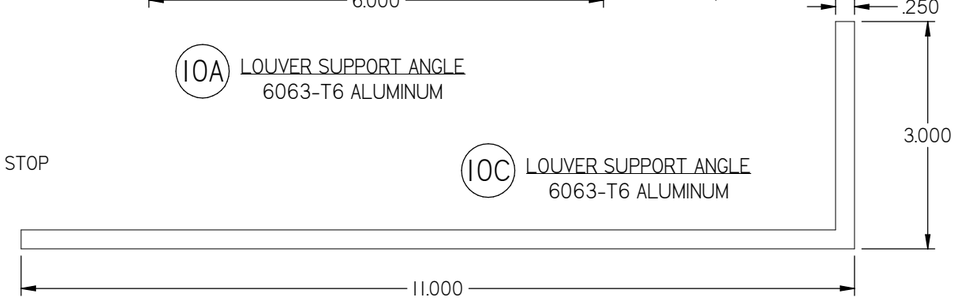

10C LOUVER SUPPORT ANGLE
6063-T6 ALUMINUM

REVISIONS:
REV B: RENUMBERED PAGE,
ADDED ITEM # 10A, 10B, 10C, 27B
RENUMBERED 27A WAS 27
REMOVED ITEM# 30

DWN BY: fcortinas
CHK BY: MAstourian
DATE: 9/18/2017
SCALE: NTS
SHEET: 22 OF 30
REV B
DWG. NO. 1605WDM

Nailor Industries Inc.
4714 Winfield Road Houston, TX 77039
TEL: 281-590-1172 FAX: 281-590-3086
www.nailor.com

TITLE: 1605WDM LOUVER W/ AND W/O DAMPER SLEEVE/CONTINUOUS MOUNT PART PROFILES CONT.

WAYNE K. HELMILA
LICENSE
No. 59092
STATE OF FLORIDA
PROFESSIONAL ENGINEER
08/20/2024
COA: 9090

RICE
ENGINEERING
105 School Creek Trail
Luxemburg, WI 54217
Phone: (920) 617-1042
Fax: (920) 617-1100
www.rice-inc.com

Florida Firm No: F-01000005061
Certificate of Authorization: #9090
Wayne K. Helmila
Registration No: 59092

MULLION MOUNTING BRACKET
FOR MULLION ANGLE BACK OF WALL MOUNT
ASTM A36

L8X6"X7/16" STEEL ANGLE X 22" LONG
(A36 OR BETTER) TYPICAL
w/ (2) 1/4" X4" GUSSET PLATES WELDED TO EACH END

1/4" DIA LAG SCREWS ANCHORS:
USE (16) 1/4 " DIA. X 6" LONG
STANDARD HEX S.S. SERIES 300
LAG SCREW
3-11/32" FULL THREAD ENGAGMENT
1" MIN. EDGE/END DISTANCE
SPACING AS SHOWN
ASSUME: SPRUCE/PINE/FIR, SG=0.42

PRODUCT REVISED
as complying with the Florida Building Code
NOA-No. 24-0516.05
Expiration Date 08/30/2028
By
Miami-Dade Product Control

30A

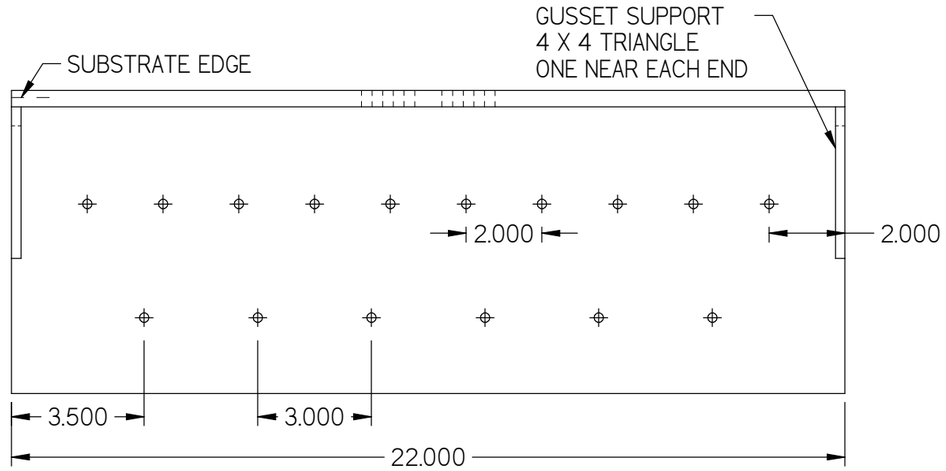

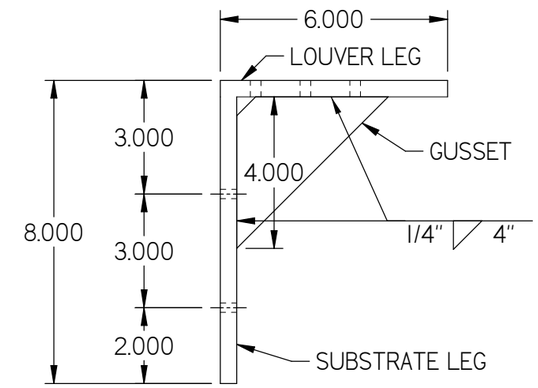

3/8" DIA. LAG SCREWS ANCHORS:
USE (12) 3/8"DIA. X 6 LONG
STANDARD HEX S.S. SERIES 300
LAG SCREW
3-9/32" FULL THREAD ENGAGMENT
1-1/2" MIN. EDGE/END DISTANCE
SPACING AS SHOWN
ASSUME: SPRUCE/PINE/FIR, SG=0.42

30B

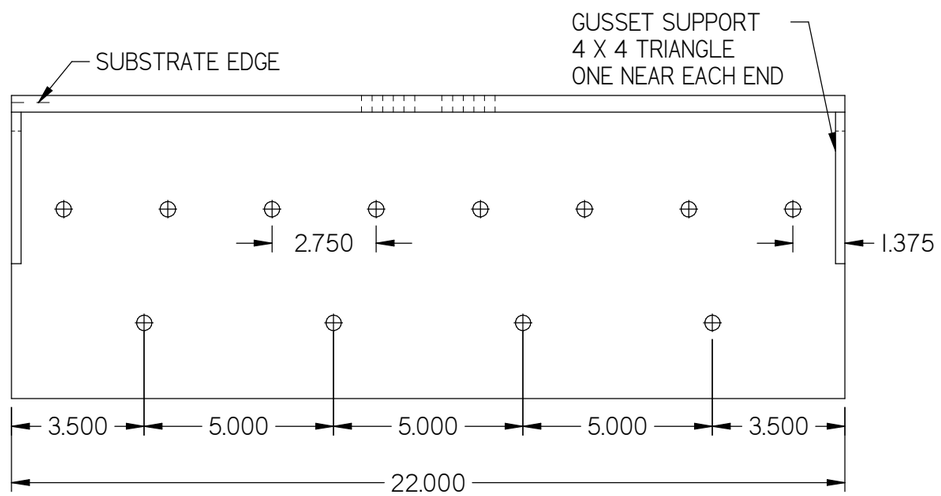

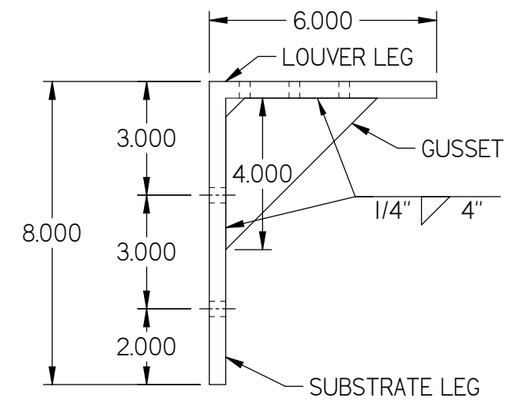

1/4-20 DIA S.S. ELCO BI-FLEX
AND DRIL FLEX ANCHORS:

30C

USE (14) 1/4" DIA. S.S. SERIES 300
ELCO DRIL-FLEX OR
ELCO DRIL-FLEX FASTENERS
FULL THREAD ENGAGMENT
1" MIN. EDGE/END DISTANCE
SPACING AS SHOWN
ASSUME: 1/4" STEEL (A-36)
Seal Dril-Flex Fasteners with Liquid Prosoco
Flashing if exposed to Exterior Conditions.

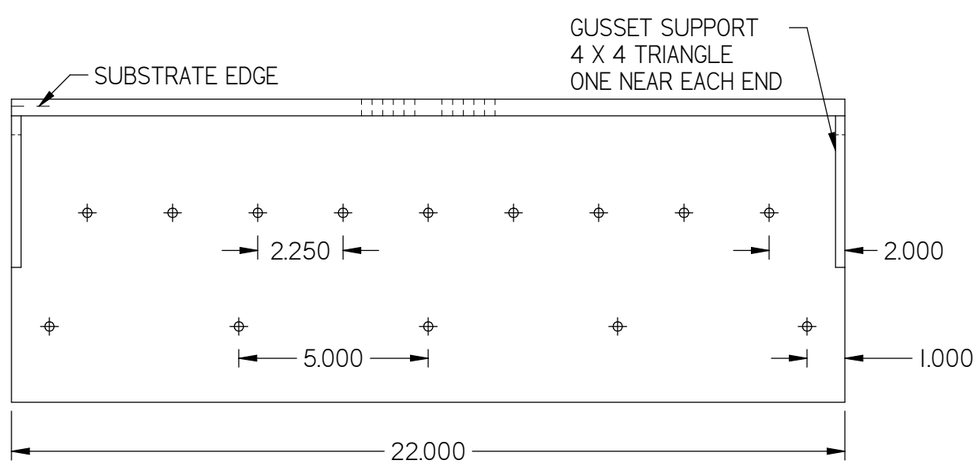

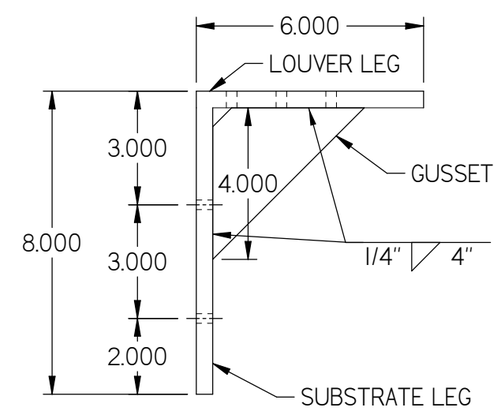

REVISIONS:
REV B: RENUMBERED PAGE, UPDATED BRACKETS

DWN BY: fcortinas
CHK BY: MAstourian
DATE: 9/18/2017
SCALE: NTS
SHEET: 23 OF 30
REV B
DWG. NO. 1605WDM

Nailor Industries Inc.
4714 Winfield Road Houston, TX 77039
TEL: 281-590-1172 FAX: 281-590-3086
www.nailor.com

TITLE: 22" MULLION ANGLES BACK OF THE WALL MOUNT

WAYNE K. HELMILA
LICENSE
No. 59092
STATE OF FLORIDA
PROFESSIONAL ENGINEER
08/20/2024
COA: 9090

RICE
ENGINEERING
105 School Creek Trail
Luxemburg, WI 54217
Phone: (920) 617-1042
Fax: (920) 617-1100
www.rice-inc.com
Florida Firm No: F-01000005061
Certificate of Authorization: #9090
Wayne K. Helmila
Registration No: 59092

MULLION MOUNTING BRACKET
FOR MULLION ANGLE BACK OF WALL MOUNT
ASTM A36

L8X6"X7/16" STEEL ANGLE X MIN 30" LONG
AS SHOWN (A36 OR BETTER) TYPICAL
w/ (2) 1/4" X4" GUSSET PLATES WELDED TO EACH END

1/2" DIA S.S. SERIES 300 HILTI KWIK BOLT EZ

USE (10) 1/2" DIA. S.S. SERIES 300 HILTI KWIK BOLT EZ
4-1/4" EMBEDMENT
SPACING AS SHOWN (HORIZ.) / 3" SPACING (VERT.)
3" MIN. EDGE DISTANCE
4" MIN. END DISTANCE
SPACING AS SHOWN
ASSUME FC' = 4000 PSI CRACKED CONCRETE

30D

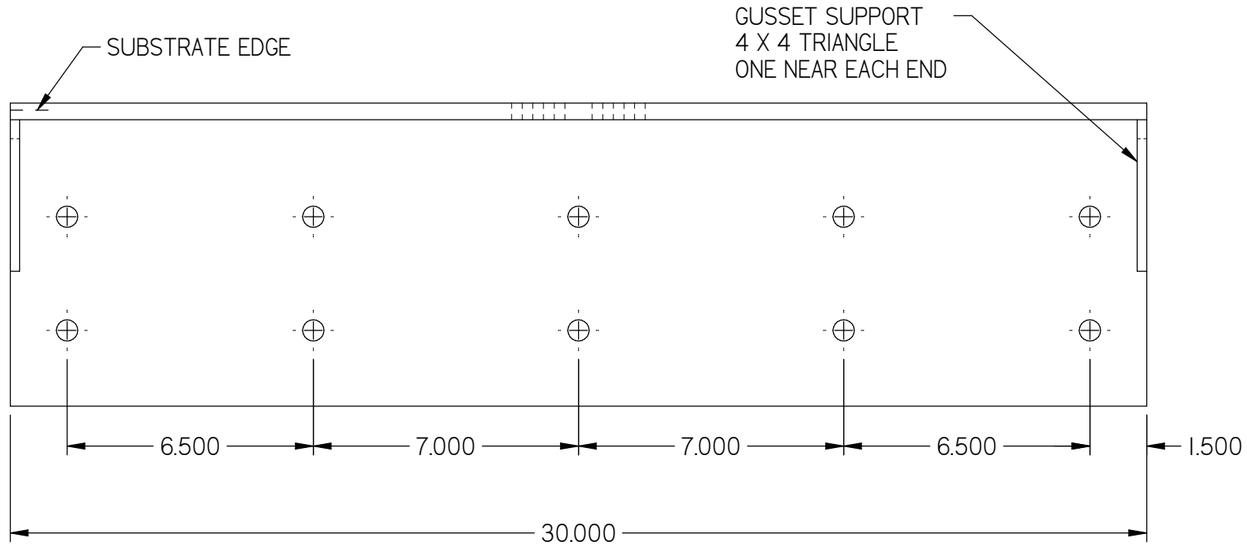

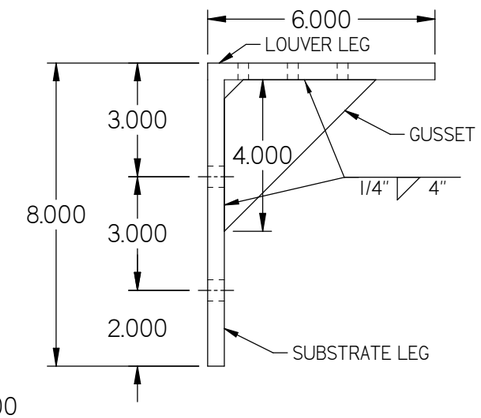

PRODUCT REVISED
as complying with the Florida Building Code
NOA-No. 24-0516.05
Expiration Date 08/30/2028
By
Miami-Dade Product Control

5/16-24 DIA. S.S. ELCO DRIL-FLEX ANCHOR

30E

USE (12) 5/16" DIA. S.S. ELCO DRIL-FLEX
FULL THREAD ENGAGMENT
1" MIN. EDGE/END DISTANCE
SPACING AS SHOWN
ASSUME: 1/4" STEEL (A36)
Seal Dril-Flex Fasteners with Liquid Prosoco
Flashing if exposed to Exterior Conditions.

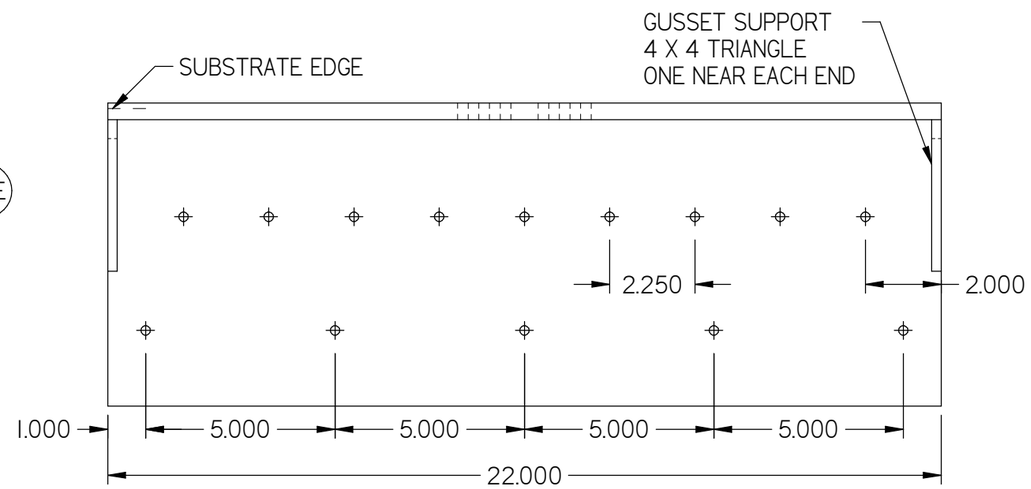

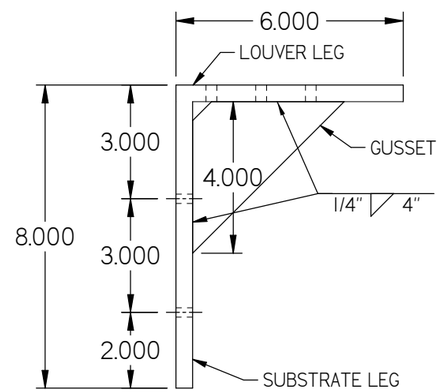

L8X6"X7/16" STEEL ANGLE X 22" LONG
(A36 OR BETTER) TYPICAL
w/ (2) 1/4" X4" GUSSET PLATES WELDED TO EACH END

REVISIONS:
REV B: ADDED PAGE,
ADDED 30" BRACKET
ADDED 22" BRACKET

DWN BY: fcortinas
CHK BY: MAstourian
DATE: 9/18/2017
SCALE: NTS
SHEET: 24 OF 30
REV B
DWG. NO. 1605WDM

Nailor Industries Inc.
4714 Winfield Road Houston, TX 77039
TEL: 281-590-1172 FAX: 281-590-3086
www.nailor.com

TITLE: 30" MULLION ANGEL
22" MULLION ANGLE
BACK OF THE WALL MOUNT

WAYNE K. HELMILA
LICENSE
No. 59092
STATE OF FLORIDA
PROFESSIONAL ENGINEER

08/20/2024
COA: 9090

RICE
ENGINEERING
105 School Creek Trail
Luxemburg, WI 54217
Phone: (920) 617-1042
Fax: (920) 617-1100
www.rice-inc.com

Florida Firm No: F-01000005061
Certificate of Authorization: #9090
Wayne K. Helmila
Registration No: 59092

MULLION MOUNTING BRACKET
FOR MULLION ANGLE BACK OF WALL MOUNT
ASTM A36

L8X6"X7/16" STEEL ANGLE
X 16" LONG AS SHOWN (A36 OR BETTER)
w/ (2) 1/4" X4" GUSSET PLATES WELDED TO EACH END

PRODUCT REVISED
as complying with the Florida Building Code
NOA-No. 24-0516.05
Expiration Date 08/30/2028
By
Miami-Dade Product Control

1/2" DIA S.S. HILTI KWIK BOLT EZ (31C)

USE (6) 1/2" DIA. S.S. SERIES 300 HILTI KWIK BOLT EZ
3-5/8"EMBEDMENT
6.5" SPACING (HORIZ.) / 3" SPACING (VERT.)
3" MIN. EDGE DISTANCE
4" MIN. END DISTANCE
SPACING AS SHOWN
ASSUME FC' = 4000 PSI CRACKED CONCRETE

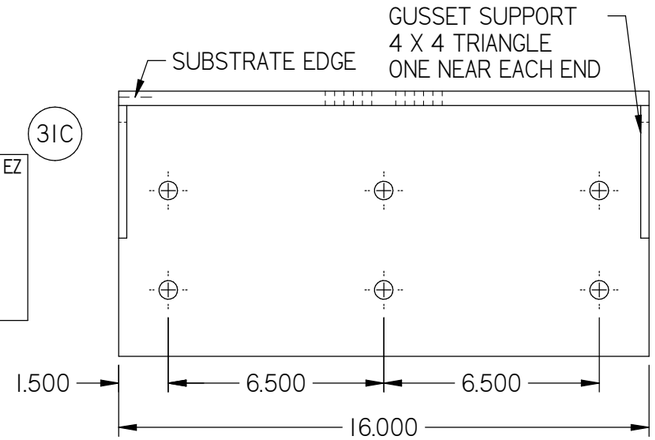

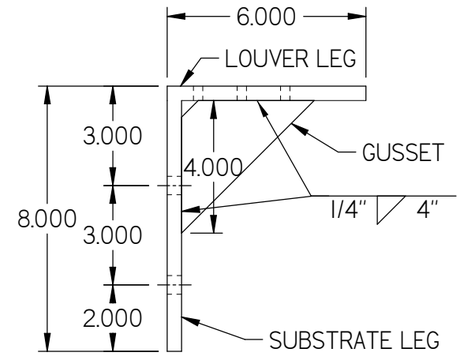

1/4" DIA LAG SCREWS ANCHORS (31A)

USE (8) 1/4" DIA. X 6" LONG
STANDARD HEX S.S. SERIES 300
LAG SCREW
3-11/32" FULL THREAD EMBEDMENT
1" MIN. EDGE / END DISTANCE
SPACING AS SHOWN
ASSUME:= SPRUCE / PINE / FIR, SG= 0.42

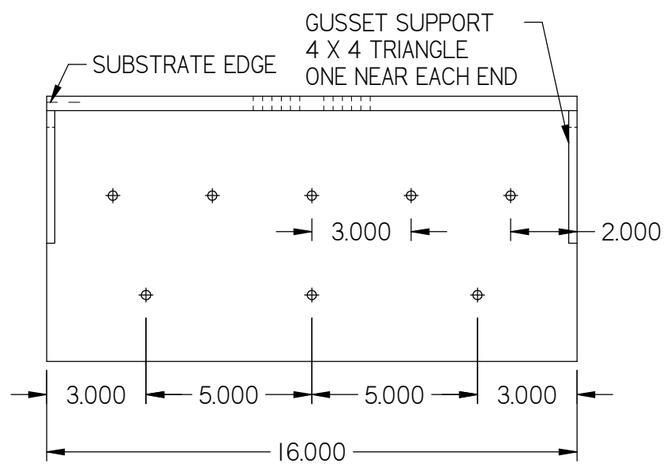

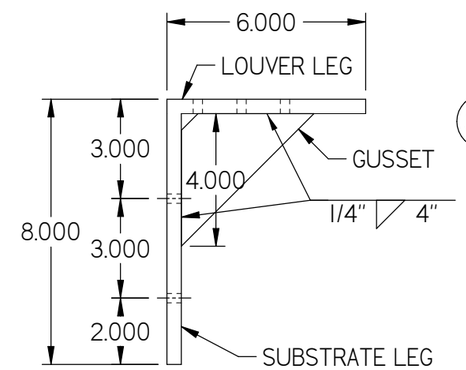

(31A) 1/4-20 DIA S.S. ELCO BI-FLEX AND DRIL FLEX ANCHOR

USE (8) 1/4" DIA. S.S. SERIES 300
ELCO BI-FLEX OR
ELCO DRIL-FLEX FASTENERS
FULL THREAD EMBEDMENT
1" MIN. EDGE / END DISTANCE
SPACING AS SHOWN
ASSUME: 1/4" STEEL (A-36)
Seal Dril-Flex Fasteners with Liquid Prosoco
Flashing if exposed to Exterior Conditions.

3/8" DIA LAG SCREWS ANCHORS (31B)

USE (6) 3/8" DIA. X 6" LONG
STANDARD HEX S.S. SERIES 300
LAG SCREW
3-9/32" FULL THREAD EMBEDMENT
1-1/2" MIN. EDGE / END DISTANCE
SPACING AS SHOWN
ASSUME: SPRUCE / PINE / FIR, SG= 0.42

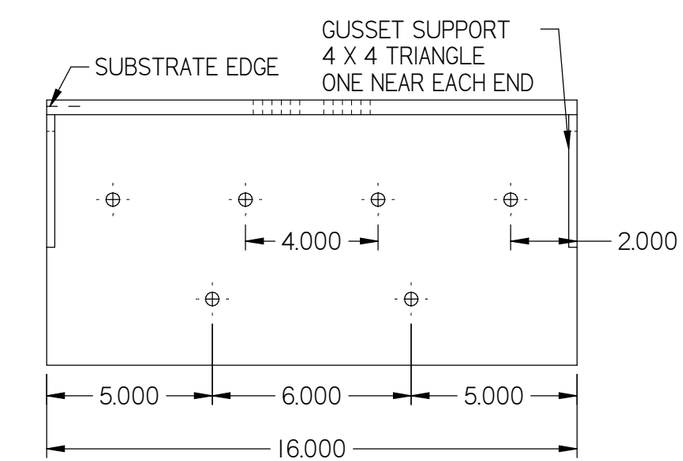

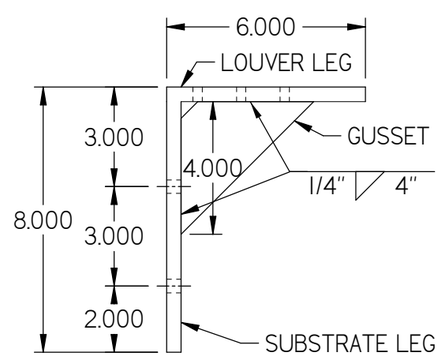

(31B) 5/16-24 DIA DRIL-FLEX ANCHORS

USE (6) 5/16" DIA.
ELCO DRIL-FLEX FASTENERS
FULL THREAD EMBEDMENT
1" MIN. EDGE / END DISTANCE
SPACING AS SHOWN
ASSUME: 1/4" STEEL (A-36)
Seal Dril-Flex Fasteners with Liquid Prosoco
Flashing if exposed to Exterior Conditions.

REVISIONS:
REV B: ADDED PAGE,
ADDED 16" BRACKET

DWN BY: fcortinas
CHK BY: MAstourian
DATE: 9/18/2017
SCALE: NTS
SHEET: 25 OF 30
REV B
DWG. NO. 1605WDM

Nailor Industries Inc.
4714 Winfield Road Houston, TX 77039
TEL: 281-590-1172 FAX: 281-590-3086
www.nailor.com

TITLE: 16" MULLION ANGLES BACK OF THE WALL MOUNT

WAYNE K. HELMILA
LICENSE
No. 59092
STATE OF FLORIDA
PROFESSIONAL ENGINEER
08/20/2024
COA: 9090

RICE
ENGINEERING
105 School Creek Trail
Luxemburg, WI 54217
Phone: (920) 617-1042
Fax: (920) 617-1100
www.rice-inc.com

Florida Firm No: F-01000005061
Certificate of Authorization: #9090
Wayne K. Helmila
Registration No: 59092

MULLION MOUNTING BRACKET
FOR MULLION ANGLE BACK OF WALL MOUNT
ASTM A36

USE 16" X 6" 1/2" STEEL PLATE ANGLE
AT 30" LONG AS SHOWN (A36 OR BETTER)
WELD 1/2" STEEL PLATE ANGLE TOGETHER WITH FULL PENETRATION BEVEL GROOVE WELD.
(2) 1/4" X 4" GUSSET PLATES AT 12" LONG WELDED TO EACH END
WELD 1/4" GUSSET PLATES WITH FILLET WELDS.

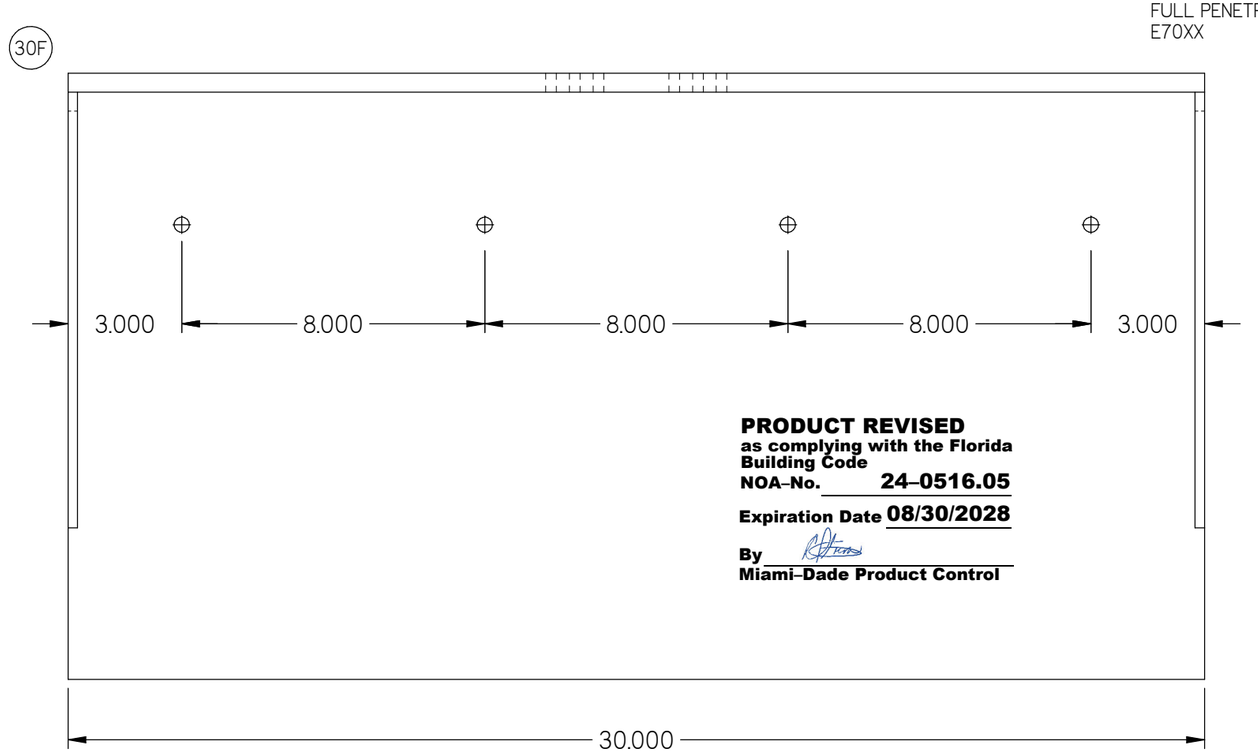

PRODUCT REVISED
as complying with the Florida Building Code
NOA-No. 24-0516.05
Expiration Date 08/30/2028
By
Miami-Dade Product Control

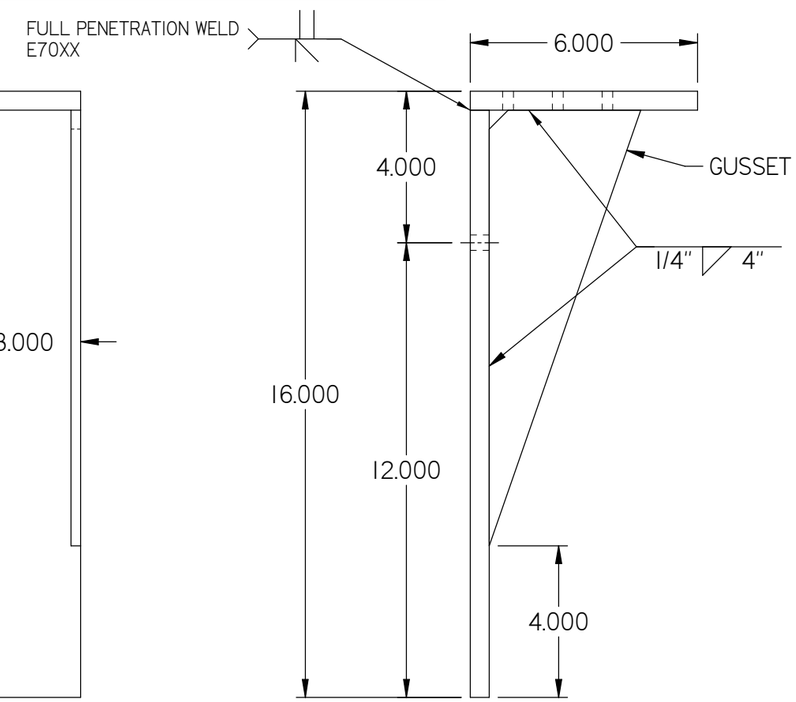

NOTE:
THESE 3/8 " DIA HILTI HUS-EZ CMU ANCHORS ARE ADEQUATE FOR DESIGN PRESSURE UP TO 150 PSF FOR 36" BLADE LOUVERS.

FOR LOUVER BLADES SPANNING 72" (SEE THE ELEVATION SHOWN ON SHEET 3 OF 30) THE MAXIMUM DESIGN PRESSURE IS +/- 80 PSF

USE (4) 3/8" DIA. HILTI KWIK-HUS-EZ SCEW ANCHORS
3-1/4" EMBEDMENT
8" SPACING AS SHOWN. LOCATE (1) FASTENER IN THE CENTER OF EACH MASONRY CELL. BRACKET CNA BE INSTALLED 4" LEFT OR RIGHT OF MULLION CENTERLINGE SO ANCHORS CAN BE INSTALLED AT CENTER OF MASONRY CELLS.
4" MIN. EDGE DISTANCE
4" MIN END DISTANCE
ASSUME GROUT FILLED MASONRY fm'= 2000 psi (DESIGN BY OTHERS)
SEAL FASTENERS WITH LIQUID PROSOCO FLASHING AT EXTERIOR CONDITIONS.

REVISIONS:
REV B: ADDED PAGE,
ADDED 30" CMU ONLY BRACKET

DWN BY: fcortinas
CHK BY: MAstourian
DATE: 9/18/2017
SCALE: NTS
SHEET: 26 OF 30
REV B
DWG. NO. 1605WDM

Nailor Industries Inc.
4714 Winfield Road Houston, TX 77039
TEL: 281-590-1172 FAX: 281-590-3086
www.nailor.com

TITLE: 30" CMU MULLION ANGLES BACK OF THE WALL MOUNT

WAYNE K. HELMILA
LICENSE
No. 59092
STATE OF FLORIDA
PROFESSIONAL ENGINEER
08/20/2024
COA: 9090

RICE
ENGINEERING
105 School Creek Trail
Luxemburg, WI 54217
Phone: (920) 617-1042
Fax: (920) 617-1100
www.rice-inc.com
Florida Firm No: F-01000005061
Certificate of Authorization: #9090
Wayne K. Helmila
Registration No: 59092

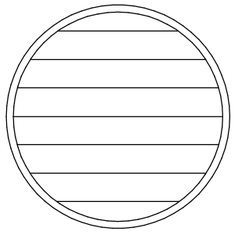

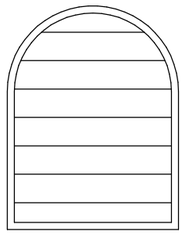

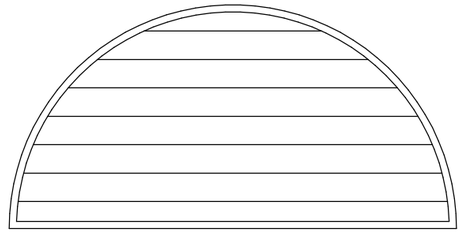

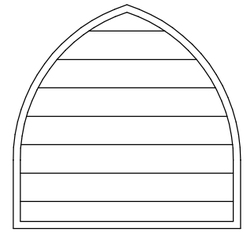

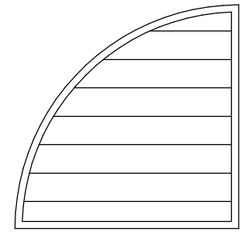

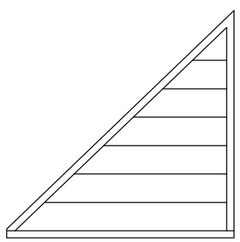

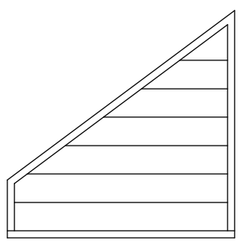

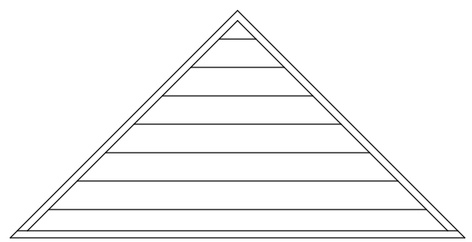

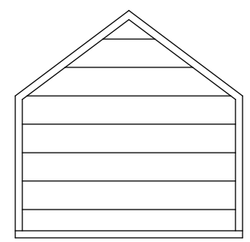

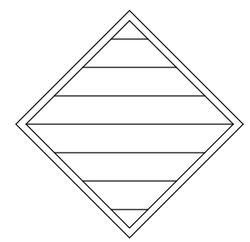

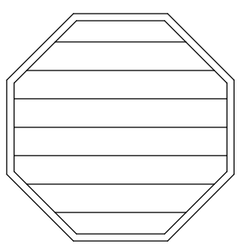

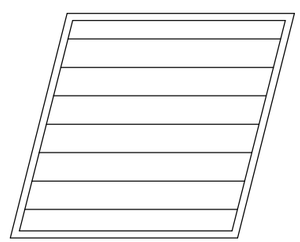

NOTES:

1. OTHER SHAPES MAY APPLY PROVIDINGTHEY ARE SIMILAR TO THOSE SHOWN AND HAVE CORNER CONSTRUCTION AS DESCRIBED ON ALL SHEETS.

2. ALL SHAPED LOUVER PANELS ARE RESTRICTED TO THE SAME PANEL WIDTH AND PRESSURE AS THE RECTANGULAR LOUVER PANELS AND BE STACKED VERTICALLY AND HORIZONTALLY THE SAME AS THE RECTANGULAR PANELS.

3. WHEN SECTION EXCEED 36" IN LENGTH BLADE SUPPORT ANGLES AND BRACKETS ARE REQUIRED.

4. USE CONTINUOUS ANGLES TO ANCHOR OTHER LOUVER SHAPES TO BUILDING SUBSTRATE. SEE ANCHOR SCHEDULE FOR SUBSTRATE-SPECIFIC LIMITATIONS.

PRODUCT REVISED
as complying with the Florida Building Code
NOA-No. 24-0516.05
Expiration Date 08/30/2028
By
Miami-Dade Product Control

REVISIONS:
REV B: RENUMBERED PAGE

DWN BY: fcortinas
CHK BY: MAstourian
DATE: 9/18/2017
SCALE: NTS
SHEET: 27 OF 30
REV B
DWG. NO. 1605WDM

Nailor Industries Inc.
4714 Winfield Road Houston, TX 77039
TEL: 281-590-1172 FAX: 281-590-3086
www.nailor.com

TITLE: 1605WDM LOUVER W/ AND W/O DAMPER AVAILABLE SHAPES

WAYNE K. HELMILA
LICENSE
No. 59092
STATE OF
FLORIDA
PROFESSIONAL ENGINEER

08/20/2024
COA: 9090

RICE
ENGINEERING
105 School Creek Trail
Luxemburg, WI 54217
Phone: (920) 617-1042
Fax: (920) 617-1100
www.rice-inc.com

Florida Firm No: F-01000005061
Certificate of Authorization: #9090
Wayne K. Helmila
Registration No: 59092

BILL OF MATERIAL

ITEM	INTERNAL ID	DESCRIPTION	MATERIAL	NOTES
1	C6-201	LOUVER HEAD	6063-T6 ALUMINIUM	
2	C6-119	LOUVER SILL	6063-T6 ALUMINIUM	
3	C6-199	LOUVER JAMB	6063-T6 ALUMINIUM	
4	C6-200	LOUVER BLADE	6063-T6 ALUMINIUM	
5	-	-	-	
6	C6-202	LOUVER BLADE BRACE	6063-T6 ALUMINIUM	
7	C6-179	MULLION BAR COVER	6063-T6 ALUMINIUM	
8	C6-169	LOUVER FLANGE	6063-T6 ALUMINIUM	
9A	C6-176	1 1/2 X 1 1/2 X 1/8 ANGLE CONT.	6063-T6 ALUMINIUM	USED AT HEAD/SILL/JAMB, OF LOUVER AND SLEEVE
9B	C6-160	2 X 2 X 1/8 ANGLE CONT.	6063-T6 ALUMINIUM	USED AS ATTACHMENT ANGLE
9C		1 1/2 X 1 1/2 X 3/16 ANGLE CONT.	6063-T6 ALUMINIUM	USED AT HEAD/SILL/JAMB, OF LOUVER AND SLEEVE
10A	C6-161B	6 X 3 X 1/4 ANGLE	6061-T6 ALUMINIUM	USED AT BLADE SUPPORT AND JAMB SUPPORT
10B		9 X 3 X1/4 ANGLE	6063-T6 ALUMINIUM	USED AT BLADE SUPPORT AND JAMB SUPPORT
10C		11 X 3 X 1/4 ANGLE	6063-T6 ALUMINIUM	USED AT BLADE SUPPORT AND JAMB SUPPORT
11		1 1/2 X 1 1/2 X 1/4 ANGLE	6063-T6 ALUMINIUM	USED AT HEAD/SLILL/JAMB OF SLEEVE
12A		4 X 2 1/2 X 1/4 X 3.625 LONG ANGLE	6061-T6 ALUMINIUM	USED AT HEAD/ SILL OF MULLION ATTACHMENT
12B		3.00 X 8.00 X .375 X 3.625 LONG	6061-T6 ALUMINIUM	FOR 1/2" DIA SS LAG SCREW
12C		3.00 X 8.00 X .375 X 3.625 LONG	6061-T6 ALUMINIUM	FOR 5/8" HILTI KWIK BOLT TZ SS 304 ANCHOR
13		4 X 2 1/2 X 1/4 X 3.625 LONG ANGLE	6061-T6 ALUMINIUM	USED AT HEAD/ SILL OF LOUVER SLEEVE ATTACHMENT
14		6 X 4 X 1/4 ALUMININM SUPPORT SHIM	5052-H3 ALUMINIUM	USED AT SILL FOR SUPPORT ANGLE
15		MULLION STIFFENER ALUM	6063-T6 ALUMINIUM	1/8 FORMED ALUM CHANNEL USED AT MULLION
16		FORMED SLEEVE	5052-H32 ALUMINIUM	1/8 FORMED SLEEVE - DEPTH VARIES
17	B2-610	DAMPER HEAD/SILL	6063-T6 ALUMINIUM	
18	B2-609	DAMPER JAMB	6063-T6 ALUMINIUM	
19	B2-527	DAMPER BLADE	6063-T6 ALUMINIUM	
20		DAMPER BLADE SEAL	SILICONE / RUBBER TYPE	MATERIAL VARIES
21		DAMPER TOP/BOTTOM CLOSURE	ALUMINIUM	
22		DAMPER BUSHING	BRONZE / SS	
23		DAMPER LINKAGE BAR	STAINLESS	
24		DAMPER JAMB SEAL	STAINLESS	
25		NON DRIVE DAMPER AXEL ASM	STAINLESS	
26		DRIVE SIDE DAMPER AXLE ASM	STAINLESS	
27		C6X8.2 STEEL CHANNEL		USED AL MULLION
28		CBX18.75 STEEL CHANNEL		USED AT MULLION
29		7" X 21" ALUMINIUM SLEEVE BRACKET	6061-T6	MULLION SLEEVE BRACKET
30	A,B,C,D,E,F	MULLION MOUNTING ANGLE BRACKET	ASTM A-36	MULLION MOUNTING
31	A,B,C	MULLION MOUNTING ANGLE BRACKET	ASTM A-36	16" MOUNTING ANGLE
32	C6-180	SCREW,MTL,10-24X1,HEX		
33	C6-181	1/4 NYLON INSERT LOCKNUT		
34	C6-182	1/4-20x2-1/2 HEX CAP SCREW	STAINLESS	
35	C6-183	WASHER,BONDED,10X1/2	STAINLESS	300 SERIES, SS COND. CW FY - 65 KSI
36	C6-184	SCREW,MTL,12-24-1-1/4,HEX		300 SERIES, SS COND. CW FY - 65 KSI
37	C6-185	1/4-20x1 HEX SCREW	STAINLESS	300 SERIES, SS COND. CW FY - 65 KSI
38	C6-186	1/4 COMM'L FLAT WASHER		300 SERIES, SS COND. CW FY - 65 KSI
39	C6-187	1/4-20x1 HEX CAP SCREW 18-8	STAINLESS	
40	C6-188	SCREW, MTL,HEX, 8-32 X 1		300 SERIES, SS COND. CW FY - 65 KSI
41	C6-189	SCREW, METAL, HW, 10-24 X 1-1/2		300 SERIES, SS COND. CW FY - 65 KSI
42	C6-192	SCREW, MTL, HEX, 8 X 1-1/2	STAINLESS	300 SERIES, SS COND. CW FY - 65 KSI
43	C6-193	SCREW, METAL, HEX, 14 X 1-1/2	STAINLESS	300 SERIES, SS COND. CW FY - 65 KSI
44	C6-194	SCREW, METAL, HEX, 12 X 1-1/2	STAINLESS	300 SERIES, SS COND. CW FY - 65 KSI
45	C6-195	1/4-20 X 1 1/4 HEX CAP SCREW 18-8	STAINLESS	
46	C6-196	1/4-20 FIN. HEX NUT 18-8	STAINLESS	
47	C6-197	1/4 LOCKWASHER 18-8	STAINLESS	
48	C6-198	SCREW, MTL, HEX, 8 X 3/4	STAINLESS	300 SERIES, SS COND. CW FY - 65 KSI
49		3/8"-16 X 2 18-6 HEX HEAD BOLT	STAINLESS	300 SERIES, SS COND. CW FY - 65 KSI
50		3/8-16 HEX LOCK NUT	STAINLESS	300 SERIES, SS COND. CW FY - 65 KSI
51		3/8-FLAT WASHER	STAINLESS	300 SERIES, SS COND. CW FY - 65 KSI

REVISIONS:
REV B: RENUMBERED PAGE
ADDED ITEM #: 10A, 10B,10C, 28

DWN BY: fcortinas
CHK BY: MAstourian
DATE: 9/18/2017
SCALE: NTS
SHEET: 28 OF 30
REV B
DWG. NO. 1605WDM

Nailor Industries Inc.
4714 Winfield Road Houston, TX 77039
TEL: 281-590-1172 FAX: 281-590-3086
www.nailor.com

TITLE: 1605WDM LOUVER W/ AND W/O DAMPER SLEEVE / CONTINUOUS MOUNT BILL OF MATERIAL

WAYNE K. HELMILA
LICENSE
No. 59092
STATE OF FLORIDA
PROFESSIONAL ENGINEER

08/20/2024
COA: 9090

RICE
ENGINEERING
105 School Creek Trail
Luxemburg, WI 54217
Phone: (920) 617-1042
Fax: (920) 617-1100
www.rice-inc.com

Florida Firm No: F-01000005061
Certificate of Authorization: #9090
Wayne K. Helmila
Registration No: 59092

*EMBEDMENT DEPTH IS EQUAL TO OVERALL LENGTH FOR ALL FASTENERS. IF SHIMS ARE USED, FASTENER LENGTH MUST BE INCREASED BY THICKNESSOF SHIMS

LOUVER MODEL 1605WDM FASTENER SCHEDULE

JAMB ANGLE MOUNT FASTENER, WIDTH <= 72 INCHES (TABLE 1)

WOOD	STEEL STUD	STEEL	CONRETE	CMU	MIN.	FASTENER TYPE	DIAMETER	# Rqd	O.C. SPACING	EDGE	END	EMBEDMENT
X					SG 0.42	LAG SCREW (300 SERIES SS- COND. CW- Fy = 65ksi)	1/4"	1	3"	2"		1-5/8"
X					SG 0.42	LAG SCREW (300 SERIES SS- COND. CW- Fy = 65ksi)	3/8"	1	5"	2"		1-5/8"
	X				16 Ga.	ELCO BI-FLEX DRILLING SCREWS (300 SERIES SS- COND. CW- Fy= 65ksi)	1/4"	1	4-1/2"	2"		3 THREADS BEYOND SUBSTRATE
		X			A-36	ELCO BI-FLEX DRILLING SCREWS (300 SERIES SS- COND. CW- Fy= 65ksi)	1/4"	1	13-1/2"	2"		1/4"
		X			A-36	ELCO DRILL-FLEX DRILLING SCREWS (COND. CW- Fy= 65ksi) SEALED w/ PROSOCO SEALANT	5/16"	1	16"	2"		1/4"
			X-CRACKED 6" DEEP		4ksi	HILTI KWIK HUS-EZ SS316 ANCHOR**	1/4"	1	7"	4"		2"
			X-CRACKED 6" DEEP		4ksi	HILTI KWIK HUS-EZ SS316 ANCHOR**	3/8"	1	12"	4"		2"
				X	2ksi	HILTI KWIKI HUS-EZ SS316 ANCHOR	3/8"	1	12"	4"		3-1/4"
				X	2ksi	DEWALT GALANIZED SCREW-BOLT+ ANCHOR	3/8"	1	4-1/2"	1-1/2"	1-1/2"	3-1/4"

MULLION ANGLE DIRECT MOUNT FASTENERS, HEIGHT <= 120 INCHES (TABLE 2)

WOOD	STEEL STUD	STEEL	CONRETE	CMU	MIN.	FASTENER TYPE	DIAMETER	# Rqd / CLIP	O.C. SPACING	EDGE	END	EMBEDMENT
X					SG 0.42	LAG SCREW (300 SERIES SS- COND. CW- Fy = 65ksi)	1/4"	10	1-1/4" X 7/8"	2"		2-5/8"
X					SG 0.42	LAG SCREW (300 SERIES SS- COND. CW- Fy = 65ksi)	1/2"	6	2-1/8" X 3"	2"		2"
		X			A-36	ELCO BI-FLEX DRILLING SCREWS (300 SERIES SS- COND. CW- Fy= 65ksi)	1/4"	4	2-1/2" X 1-5/16"	2"		1/4"
		X			A-36	ELCO DRILL-FLEX DRILLING SCREWS (COND. CW- Fy= 65ksi) SEALED w/ PROSOCO SEALANT	5/16"	2	2-5/8"	2"		1/4"
			X-CRACKED 10" DEEP		4ksi	HILTI KWIK BOLT TZ2 SS 304 ANCHOR**	5/8"	2	4"	7"	8"	4"

MULLION ANGLE MOUNT BACK OF WALL FASTENERS, HEIGHT <= 120 INCHES (TABLE 3)

WOOD	BRACKET TYPE	STEEL	CONRETE	CMU	MIN.	FASTENER TYPE	DIAMETER	# Rqd	O.C. SPACING	EDGE	END	EMBEDMENT
X	30A				SG 0.42	LAG SCREW (300 SERIES SS- COND. CW- Fy = 65ksi)	1/4"	16	VARIES	1"	1"	3-11/32"
X	31A				SG 0.42	LAG SCREW (300 SERIES SS- COND. CW- Fy = 65ksi)	1/4"	8	VARIES	1"	1"	3-11/32"
X	30B				SG 0.42	LAG SCREW (300 SERIES SS- COND. CW- Fy = 65ksi)	3/8"	12	VARIES	1-1/2""	1-1/2"	3-9/32"
X	31B				SG 0.42	LAG SCREW (300 SERIES SS- COND. CW- Fy = 65ksi)	3/8"	6	VARIES	1-1/2"	1-1/2"	3-9/32"
	30C	X			A-36	ELCO BI-FLEX OR ELCO DRILL-FLEX DRILLING SCREWS (300 SERIES SS) SEAL DRILL-FLEX w/ PROSOCO SEALANT	1/4"	14	VARIES	1"	1"	1/4"
	31A	X			A-36	ELCO BI-FLEX OR ELCO DRILL-FLEX DRILLING SCREWS (300 SERIES SS) SEAL DRILL-FLEX w/ PROSOCO SEALANT	1/4"	8	VARIES	1"	1"	1/4"
	30E	X			A-36	ELCO DRILL-FLEX DRILLING SCREWS (COND. CW - Fy = 65ksi) SEALED w/ PROSOCO SEALANT	5/16"	12	VARIES	1"	1"	1/4"
	31B	X			A-36	ELCO DRILL-FLEX DRILLING SCREWS (COND. CW - Fy = 65ksi) SEALED w/ PROSOCO SEALANT	5/16"	6	VARIES	1"	1"	1/4"
	30D		X-CRACKED 8" DEEP		4ksi	HILTI KWIK BOLT EZ SS 316 ANCHOR **	1/2"	10	VARIES	3"	4"	4-1/4"
	31C		X-CRACKED 8" DEEP		4ksi	HILTI KWIK BOLT EZ SS 304 ANCHOR **	1/2"	6	VARIES	3"	4"	3-5/8"
	30F			X	2ksi	HILTI KWIK-HUS-EZ SCREW ANCHORS	3/8"	4	8	4"	4"	3-1/4"

PRODUCT REVISED
as complying with the Florida Building Code
NOA-No. 24-0516.05
Expiration Date 08/30/2028
By
Miami-Dade Product Control

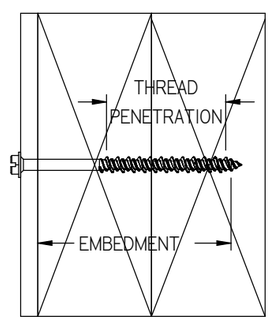

REVISIONS:
REV B: RENUMBERED PAGE
UPDATED FASTENER TABLES
REMOVED GENERAL NOTES

CHK BY: MAstourian
SCALE: NTS
DWN BY: fcortinas
DATE: 9/18/2017
SHEET: 29 OF 30
REV B
DWG. NO. 1605WDM

Nailor Industries Inc.
4714 Winfield Road Houston, TX 77039
TEL: 281-590-1172 FAX: 281-590-3086
www.nailor.com

TITLE: 1605WDM LOUVER W/ AND W/O DAMPER SLEEVE FASTENER TABLES

WAYNE K. HELMILA
LICENSE
No. 59092
STATE OF FLORIDA
PROFESSIONAL ENGINEER
08/20/2024
COA: 9090

RICE
ENGINEERING
105 School Creek Trail
Luxemburg, WI 54217
Phone: (920) 617-1042
Fax: (920) 617-1100
www.rice-inc.com
Florida Firm No: F-01000005061
Certificate of Authorization: #9090
Wayne K. Helmila
Registration No: 59092

GENERAL NOTES:

1. IT SHALL BE THE RESPONISBILITY OF THE ENGINEER OF RECORD TO VERIFY THE STRUCTURAL INTEGRITY OF THE EXISTING STRUCTURE TO SUPPORT THE LOADS IMPOSED BY THE LOUVER(S).
2. THE 1605WDM WITH AND WITHOUT 2020 DAMPER HAVE BEEN DESIGNED AND TESTED IN ACCORDANCE WITH THE FLORIDA BUILDING CODE (FBC) AND TEST PROTOCALS tas 100 A (WIND DRIVEN RAIN), TAS-201 (IMPACT), TAS-202 (UNIFORM STATIC PRESSURE), AND TAS-203 (CYCLIC FATIGUE).
3. MAXIMUM SINGLE SECTION SIXE IS 72" WIDE X 120" HIGH.
4. MAXIMUM ASSEMBLED LOUVER SIZE IS UNLIMITED WIDE X 120" HIGH.
5. SECTIONS OR ASSEMBLIES MAY BE STACKED VERTICALLY PROVIDING A SUITABLE STRUCTURAL SUPPORT IS DESIGNED AND INSTALLED BY OTHERS TO SUPPORT ALL LOADS TRANSFERRED FROM THE LOUVER.
6. CMU SHALL BE ASTM C90, TYPE II, 2,000 MIN PSI GROUT-FILLED, STEEL STUDS TO BE 16 G.A. FY= 50ksi MIN.
7. THE SLEEVE MOUNT STYLE LOUVER UTILIZES AN ANCHORLESS INSTALLATION METHOD THAT DOES NOT REQUIRE THE USE OF FASTENERS INTO THE SUBSTRATE. IT MAY BE INSTALLED IN ANY SUBSTRATE THAT WILL WITHSTAND THE LOADS TRANSFERRED TO IT BY THE LOUVER. NAILOR IND. DOES NOT DETERMINE THE STRUCTURAL INTEGRITY OF THE SUBSTRATE STRUCTURE.
8. THE CONTINUOUS ANGLE MOUNT STYLE UTILIZES A CONTINUOUS JAMB ANGLETHAT IS ATTACHED TO THE SUBSTRATE BY FASTENERS. IT MAY BE INSTALLED IN CONCRETE, CMU, STEEL, OR WOOD ACCORDING TO THE FASTENER SCHEDULE. NAILOR IND. DOES NOT DETERMINE THE STRUCTUAL INTEGRITY OF THE SUBSTRATE STRUCTURE.
9. LOUVER ASSEMBLY IS QUALIFIEDFOR A MAXIMUM DESIGN LOAD OF +/− 150 PSF, WITH THE EXCEPTION OF THE GROUT FILLED CMU BACK OF WALL MOUNTING BRACKET ANCHORS FOR THE 72" BLADES WHERE THE MAXIMUM DESIGN LOAD IS +/− 80 PSF.
10. LOUVER ASSEMBLY WITH AND WITHOUT 2020 DAMPER SHALL ONLY BE INSTALLED IN A LOCATION WHERE THE ROOM BEHIND THE LOUVER IS DESIGNED TO DRAIN WATER PENETRATING INTO THE ROOM AND THE ROOM WILL HOUSE WATER RESISTANT / WATER PROOF EQUIPMENT, COMPONENTS, AND / OR SUPPLIES.
11. INSTALLER TO PROVIDE SEPERATION OF DISSIMILAR MATERIALS AS REQUIRED.
12. THE DAMPER MAY BE OPERATIED BY A MANUAL QUADRANT OR BY AN ELECTRIC OR PNEUMATIC ACTUALTOR, THE DAMPER'S ACTUATOR IS NOT PART OF THIS APPROVAL, BUT SHALL BE CERTIFIED BY AN INDEPENDENT TESTING AGENCY.
13. FRAME CONSTRUCTION, HEAD AND SILL ARE SQUARE CUT, JAMBS ARE SQUARE CUT @ HEAD AND SILL. CORNERS ARE SECURED WITH (2) #10-24 x 1 1/2 HW, BLADES ARE SECURED TO JAMBS WITH (2) #10-24 X 1 1/2 HW, @ EACH END.
14. STEEL / STAINLESS-STEEL/ ALUMINIUM PARTS MAY BE MADE OUT OF ALTERNATE ALLOY THA HAS EQUAL OR GREATER YIELD STRENGTH.
15. BLADE SUPPORT ANGLE AND BLADE SUPPORT BRACE ONLY REQUIRED WHEN ACTUAL LOUVER SECTION WIDTH IS GREATER THAN 36 INCHES.
16. THREAD PENETRATION LENGTH SIGNIFIES THE REQUIRED LENGTH OF THE THREADED PORTION OF THE FASTENER INTO THE WOOD SUBSTRATE PROVINDING FULL CONTACT WITH WOOD. LAG SCREW TIO CANNOT BE CONSIDERED PART OF THE TREADED PORTION OF THE SCREW. LAG SCREWS ARE NOT TO BE INSTALLED AT WOOD JOINTS / SPLICES WHERE THE LAG SCREW COULD FALL BETWEEN MEMBERS.

** NOTE ENGINEER OF RECORD (EOR) IS RESPONSIBLE FOR DETERMINING IF CONCRETE IS TO BE CONSIDERED CRACKED OR UNCRACKED.

PRODUCT REVISED
as complying with the Florida Building Code
NOA-No. 24-0516.05
Expiration Date 08/30/2028
By
Miami-Dade Product Control

REVISIONS:
REV B: ADDED PAGE, ADDED GENERAL NOTES

DWN BY: fcortinas
CHK BY: MAstourian
DATE: 9/18/2017
SCALE: NTS
SHEET: 30 OF 30
REV B
DWG. NO. 1605WDM

Nailor Industries Inc.
4714 Winfield Road Houston, TX 77039
TEL: 281-590-1172 FAX: 281-590-3086
www.nailor.com

TITLE: 1605WDM LOUVER W/ AND W/O DAMPER SLEEVE GENERAL NOTES

WAYNE K. HELMILA
LICENSE
No. 59092
STATE OF FLORIDA
PROFESSIONAL ENGINEER

08/20/2024
COA: 9090

RICE
ENGINEERING
105 School Creek Trail
Luxemburg, WI 54217
Phone: (920) 617-1042
Fax: (920) 617-1100
www.rice-inc.com

Florida Firm No: F-01000005061
Certificate of Authorization: #9090
Wayne K. Helmila
Registration No: 59092