EXTRUDED ALUMINUM STATIONARY LOUVER
HIGH VELOCITY WIND-DRIVEN RAIN AND IMPACT RESISTANT
3" (76) DEEP • VERTICAL BLADE
MODEL: 1603WDV

QUALIFICATIONS:

- **AMCA 500-L (Wind-Driven Rain, Water Penetration, Air Performance).**
- **AMCA 540 (Wind-Borne Debris Impact Test [Basic "Level D" Protection]).**
- **AMCA 550 (High Velocity Wind-Driven Rain Resistance Test).**
- **Wind load rating +/– 70 PSF.**

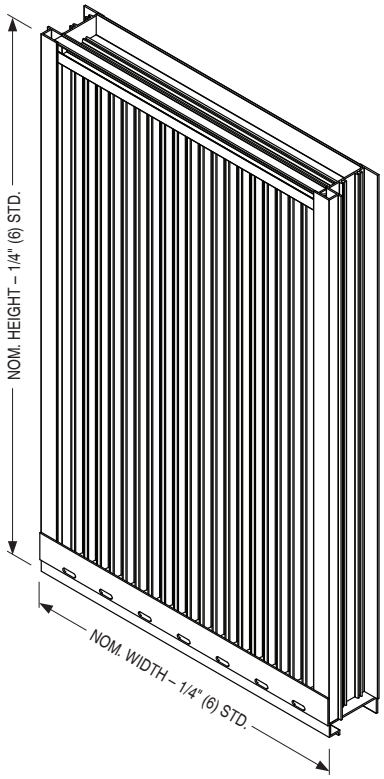

STANDARD CONSTRUCTION:

FRAME:	3" (76) deep, Type 6063-T6 extruded aluminum, .090" (2.29) nominal wall thickness. Integral downspouts and caulking slot provided.
BLADES:	Type 6063-T6 extruded aluminum, .060" (1.52) nominal wall thickness, with reinforcing bosses.
BLADE STYLE:	Sinusoidal.
BLADE SPACING:	Approximately .875" (22) on centers.
BLADE SUPPORT:	2.5" (64) strap every 40" (102) or less in height.
SCREEN:	3/4" x .050 (19 x 1.3) expanded, flattened aluminum bird screen in removable frame, inside (rear) mount (adds approximately 3/8" [10] to louver depth).
FINISH:	Mill.
MINIMUM SIZE:	12" W x 12" H (305 x 305).
MAX. SINGLE SECTION SIZE:	60" W x 120" H (1524 x 3048) 50 sq. ft. (4.6 m^2). Larger louvers will require field assembly of smaller sections.
MAXIMUM SIZE:	Unlimited Width x 120" H (3048).

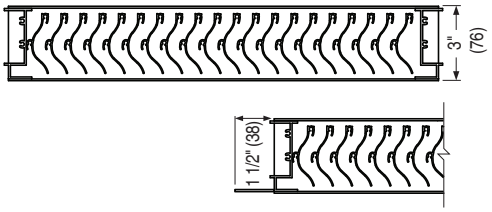

OPT. FLANGED FRAME (FL15 STD.)

OPTIONS:

- ❑ **FL15** Flanged Frame, 1 1/2" (38)
- ❑ **FL20** Flanged Frame, 2" (51)
- ❑ **BSSS** Type 304 S.S. Bird Screen.
- ❑ **BSN** No Bird Screen.
- ❑ **ISA** Aluminum Insect Screen.
- ❑ **ISSS** Type 304 S.S. Insect Screen.
- ❑ **ESI** Extended Sill.
- ❑ **PASI** Sill Pan.
- ❑ **PAAA** Perimeter Anchor Angles (Aluminum, Continuous).
- ❑ Other: _____ .

OPTIONAL FINISHES:

- ❑ **PC3** Powder Coat AAMA 2603. Color: _____ .
- ❑ **PC4** High Performance Powder Coat AAMA 2604 (Equivalent to 50% Kynar®). Color: _____ .
- ❑ **PC5** Fluoropolymer Powder Coat AAMA 2605 (Equivalent to 70% Kynar®). Color: _____ .
- ❑ **PCC** Prime Coat.
- ❑ **AN04** Clear Anodized 204-R1.
- ❑ **AN15** Clear Anodized 215-R1.
- ❑ **ANLB** Light Bronze.
- ❑ **ANMB** Medium Bronze.
- ❑ **ANDB** Dark Bronze.
- ❑ **ANBK** Black.

SCHEDULE TYPE:	Page 1 of 3			
PROJECT:	Dimensions are in inches (mm).			
ENGINEER:	**DATE**	**B SERIES**	**SUPERSEDES**	**DRAWING NO.**
CONTRACTOR:	**4 - 9 - 25**	**1600**	**NEW**	**1603WDV**

Nailor Industries Inc. reserves the right to change any information concerning product or pricing without notice.

Nailor® Industries Inc.

EXTRUDED ALUMINUM STATIONARY LOUVER
HIGH VELOCITY WIND-DRIVEN RAIN AND IMPACT RESISTANT
3" (76) DEEP • VERTICAL BLADE • PERFORMANCE DATA
MODEL: 1603WDV

FREE AREA in Square Feet and Square Meters

Height in Inches and Meters	Width in Inches and Meters								
	12 0.30	**18** 0.46	**24** 0.61	**30** 0.76	**36** 0.91	**42** 1.07	**48** 1.22	**54** 1.37	**60** 1.52
12 0.30	**0.23** 0.02	**0.39** 0.04	**0.53** 0.05	**0.69** 0.06	**0.85** 0.08	**1.01** 0.09	**1.17** 0.11	**1.33** 0.12	**1.49** 0.14
18 0.46	**0.47** 0.04	**0.80** 0.07	**1.08** 0.10	**1.41** 0.13	**1.74** 0.16	**2.06** 0.19	**2.39** 0.22	**2.72** 0.25	**3.05** 0.28
24 0.61	**0.71** 0.07	**1.20** 0.11	**1.63** 0.15	**2.13** 0.20	**2.62** 0.24	**3.12** 0.29	**3.61** 0.34	**4.11** 0.38	**4.61** 0.43
30 0.76	**0.95** 0.09	**1.61** 0.15	**2.18** 0.20	**2.85** 0.26	**3.51** 0.33	**4.17** 0.39	**4.84** 0.45	**5.50** 0.51	**6.16** 0.57
36 0.91	**1.19** 0.11	**2.02** 0.19	**2.73** 0.25	**3.56** 0.33	**4.40** 0.41	**5.23** 0.49	**6.06** 0.56	**6.89** 0.64	**7.72** 0.72
42 1.07	**1.43** 0.13	**2.43** 0.23	**3.28** 0.31	**4.28** 0.40	**5.28** 0.49	**6.28** 0.58	**7.28** 0.68	**8.28** 0.77	**9.28** 0.86
48 1.22	**1.67** 0.15	**2.83** 0.26	**3.83** 0.36	**5.00** 0.46	**6.17** 0.57	**7.34** 0.68	**8.50** 0.79	**9.67** 0.90	**10.84** 1.01
54 1.37	**1.91** 0.18	**3.24** 0.30	**4.39** 0.41	**5.72** 0.53	**7.05** 0.66	**8.39** 0.78	**9.72** 0.90	**11.06** 1.03	**12.39** 1.15
60 1.52	**2.15** 0.20	**3.65** 0.34	**4.94** 0.46	**6.44** 0.60	**7.94** 0.74	**9.44** 0.88	**10.95** 1.02	**12.45** 1.16	**13.95** 1.30
66 1.68	**2.39** 0.22	**4.06** 0.38	**5.49** 0.51	**7.16** 0.66	**8.83** 0.82	**10.50** 0.98	**12.17** 1.13	**13.84** 1.29	**15.51** 1.44
72 1.83	**2.63** 0.24	**4.46** 0.41	**6.04** 0.56	**7.88** 0.73	**9.71** 0.90	**11.55** 1.07	**13.39** 1.24	**15.23** 1.41	**17.07** 1.59
78 1.98	**2.87** 0.27	**4.87** 0.45	**6.59** 0.61	**8.60** 0.80	**10.60** 0.98	**12.61** 1.17	**14.61** 1.36	**16.62** 1.54	**18.62** 1.73
84 2.13	**3.10** 0.29	**5.28** 0.49	**7.14** 0.66	**9.31** 0.87	**11.49** 1.07	**13.66** 1.27	**15.83** 1.47	**18.01** 1.67	**20.18** 1.87
90 2.29	**3.34** 0.31	**5.69** 0.53	**7.69** 0.71	**10.03** 0.93	**12.37** 1.15	**14.71** 1.37	**17.06** 1.58	**19.40** 1.80	**21.74** 2.02
96 2.44	**3.58** 0.33	**6.09** 0.57	**8.24** 0.77	**10.75** 1.00	**13.26** 1.23	**15.77** 1.46	**18.28** 1.70	**20.79** 1.93	**23.29** 2.16
102 2.59	**3.82** 0.36	**6.50** 0.60	**8.79** 0.82	**11.47** 1.07	**14.15** 1.31	**16.82** 1.56	**19.50** 1.81	**22.18** 2.06	**24.85** 2.31
108 2.74	**4.06** 0.38	**6.91** 0.64	**9.34** 0.87	**12.19** 1.13	**15.03** 1.40	**17.88** 1.66	**20.72** 1.92	**23.57** 2.19	**26.41** 2.45
114 2.90	**4.30** 0.40	**7.31** 0.68	**9.90** 0.92	**12.91** 1.20	**15.92** 1.48	**18.93** 1.76	**21.94** 2.04	**24.95** 2.32	**27.97** 2.60
120 3.05	**4.54** 0.42	**7.72** 0.72	**10.45** 0.97	**13.63** 1.27	**16.81** 1.56	**19.99** 1.86	**23.16** 2.15	**26.34** 2.45	**29.52** 2.74

SCHEDULE TYPE:	Page 2 of 3			
PROJECT:	Dimensions are in inches (mm).			
ENGINEER:	**DATE**	**B SERIES**	**SUPERSEDES**	**DRAWING NO.**
CONTRACTOR:	**4 - 9 - 25**	**1600**	**NEW**	**1603WDV**

Nailor Industries Inc. reserves the right to change any information concerning product or pricing without notice.

EXTRUDED ALUMINUM STATIONARY LOUVER
HIGH VELOCITY WIND-DRIVEN RAIN AND IMPACT RESISTANT
3" (76) DEEP • VERTICAL BLADE • PERFORMANCE DATA
MODEL: 1603WDV

AIRFLOW / WATER PENETRATION DATA
for 48" x 48" (1219 x 1219) Louver Size

	Free Area %	53%
	Free Area sq. ft. (sq. m.)	8.50 (0.79)
INTAKE	Free Area Velocity at Point of Beginning Water Penetration at .01 oz./sq. ft. (3 ml/sq. m) (15 min. test duration)	1250 fpm (381 m/min.)*
INTAKE	Air Volume at 1250 fpm Free Area Velocity	10,625 cfm (5014 l/s)
INTAKE	Pressure Drop @ 1250 fpm	.24 in. w.g. (60 Pa)

NOTE: To minimize water penetration when sizing intake louvers, select a Free Area Velocity that is **below** the beginning point of water penetration.*Maximum Free Area Velocity tested is 1250 fpm. Beginning point of water penetration for this model is above 1250 fpm.

WIND DRIVEN RAIN PERFORMANCE

Core Ventilation Rate in fpm (m/s)	0 (0.00)	98 (0.50)	197 (1.00)	295 (1.50)	393 (2.00)	492 (2.50)	590 (3.00)	688 (3.50)	791 (4.02)	888 (4.51)	986 (5.01)
Free Area Ventilation Rate in fpm (m/s)	0 (0.00)	164 (0.83)	328 (1.66)	491 (2.49)	655 (3.33)	819 (4.16)	983 (4.99)	1146 (5.82)	1291 (6.56)	1449 (7.36)	1612 (8.19)
Effectiveness Ratio (%)	100	100	100	100	100	100	100	100	100	100	99.9
Penetration Class	A	A	A	A	A	A	A	A	A	A	A

Test was based on a 39.375" x 39.375" (1.0 m x 1.0 m) core area louver tested at a rainfall rate of 3" per hour (76 mm/hour) with a wind velocity of **29 mph (13 m/s).**

Core Ventilation Rate in fpm (m/s)	0 (0.00)	95 (0.48)	192 (0.98)	292 (1.48)	381 (1.94)	474 (2.41)	576 (2.93)	663 (3.37)	764 (3.88)	863 (4.38)	955 (4.85)
Free Area Ventilation Rate in fpm (m/s)	0 (0.00)	159 (0.81)	319 (1.62)	485 (2.47)	635 (3.22)	789 (4.01)	958 (4.87)	1103 (5.60)	1271 (6.46)	1406 (7.14)	1556 (7.90)
Effectiveness Ratio (%)	100	100	100	100	100	100	100	100	100	100	100
Penetration Class	A	A	A	A	A	A	A	A	A	A	A

Test was based on a 39.375" x 39.375" (1.0 m x 1.0 m) core area louver tested at a rainfall rate of 8" per hour (203 mm/hour) with a wind velocity of **50 mph (22 m/s).**

Wind Driven Rain Penetration Classes	
Class	Effectiveness
A	1 to 0.99
B	0.989 to .95
C	0.949 to .80
D	Below 0.80

PRESSURE DROP

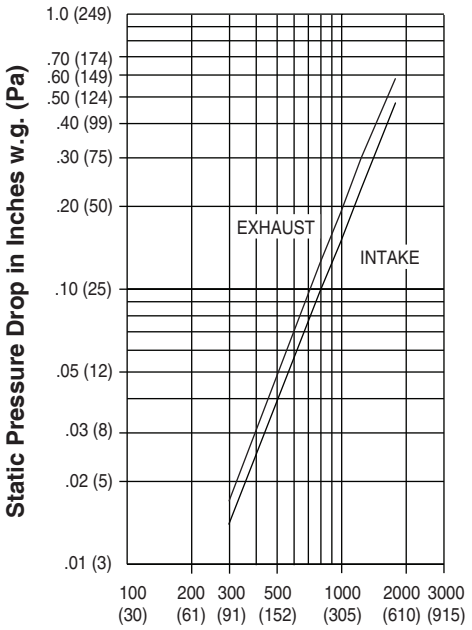

Air Velocity in Feet (Meters) Per Minute Through Free Area

Louver test size: 48" x 48" (1219 x 1219 mm).
Standard air density @ 0.075 lbs/ft³.
Tested to AMCA Fig. 5.5 – 6.5.

amca INTERNATIONAL LISTED
HIGH VELOCITY RAIN RESISTANT WITH BLADES FULLY OPEN AND IMPACT RESISTANT LOUVER
Basic Protection Level D
See www.AMCA.org for all certified or listed products
This label does not signify AMCA airflow performance certification.

amca WORLDWIDE CERTIFIED RATINGS — WATER PENETRATION, AIR PERFORMANCE, WIND DRIVEN RAIN — AIR MOVEMENT AND CONTROL ASSOCIATION INTERNATIONAL, INC. www.amca.org

Nailor Industries Inc. certifies that the Model 1603WDV shown herein is licensed to bear the AMCA Certified Ratings Program seal. The ratings shown are based on tests and procedures performed in accordance with AMCA Publication 511 and comply with the requirements of the AMCA Certified Ratings Program. The AMCA Certified Ratings Program seal applies to Water Penetration, Wind Driven Rain, and Air Performance ratings.

Louvers were tested in accordance with AMCA Standard 500-L.

Nailor Industries Inc. certifies that the 1603WDV louver shown herein is approved to bear the AMCA International Listing Label. The ratings shown are based on tests and procedures performed in accordance with AMCA publications and comply with the requirements of the AMCA International Listing Label program. The AMCA International Listing Label applies to pressure cycle tested wind borne debris impact resistant louvers rated for Basic Protection and +/- 70PSF with a minimum blade span of less than 12 in. (305mm) and a maximum unsupported blade span of 38 in. (97 mm) and to High Velocity Wind-Driven Rain Resistant Louvers tested in the fully open position that permits airflow through a louver.

SCHEDULE TYPE:	Page 3 of 3			
PROJECT:	Dimensions are in inches (mm).			
ENGINEER:	**DATE**	**B SERIES**	**SUPERSEDES**	**DRAWING NO.**
CONTRACTOR:	**4 - 9 - 25**	**1600**	**NEW**	**1603WDV**

EXTRUDED ALUMINUM STATIONARY LOUVER
MIAMI-DADE QUALIFIED • FLORIDA PRODUCT APPROVED
HIGH VELOCITY WIND-DRIVEN RAIN RESISTANT
3" (76) DEEP • VERTICAL BLADE
MODEL: 1603WDVM

QUALIFICATIONS:

- **Miami-Dade County NOA No. : 26-0518.10**
- **Florida Product Approval No. : PENDING**
- **Tested in accordance with: TAS-201 (Large Missile Impact Test), TAS-202 (Uniform Static Air Pressure Test), TAS-203 (Cyclic Wind Pressure Loading Test).**
- **AMCA 500-L (Wind-Driven Rain, Water Penetration, Air Performance).**
- **AMCA 540 (Wind-Borne Debris Impact Test [Basic "Level D" Protection]).**
- **AMCA 550 (High Velocity Wind-Driven Rain Resistance Test).**
- **Wind load rating +/– 120 PSF.**

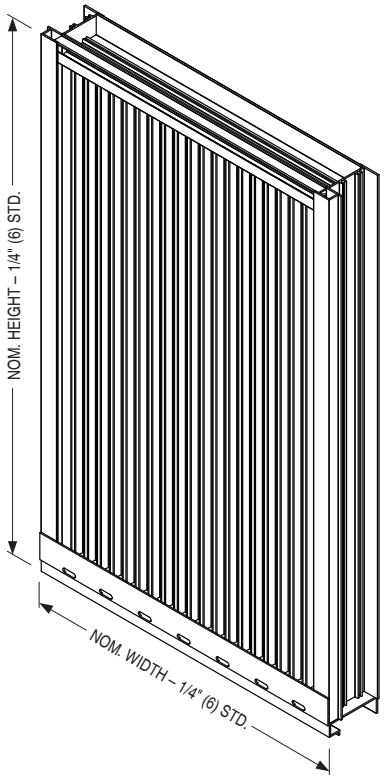

STANDARD CONSTRUCTION:

FRAME:	3" (76) deep, Type 6063-T6 extruded aluminum, .090" (2.29) nominal wall thickness. Integral downspouts and caulking slot provided.
BLADES:	Type 6063-T6 extruded aluminum, .060" (1.52) nominal wall thickness, with reinforcing bosses.
BLADE STYLE:	Sinusoidal.
BLADE SPACING:	Approximately .875" (22) on centers.
BLADE SUPPORT:	2.5" (64) strap every 40" (102) or less in height.
SCREEN:	3/4" x .050 (19 x 1.3) expanded, flattened aluminum bird screen in removable frame, inside (rear) mount (adds approximately 3/8" [10] to louver depth).
FINISH:	Mill.
MINIMUM SIZE:	12" W x 12" H (305 x 305).
MAX. SINGLE SECTION SIZE:	60" W x 120" H (1524 x 3048) 50 sq. ft. (4.6 m^2). Larger louvers will require field assembly of smaller sections.
MAXIMUM SIZE:	Unlimited Width x 120" H (3048).

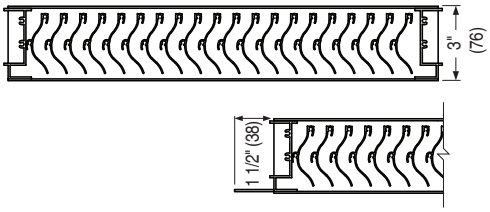

OPT. FLANGED FRAME (FL15 STD.)

OPTIONS:

- ❑ **FL15** Flanged Frame, 1 1/2" (38)
- ❑ **FL20** Flanged Frame, 2" (51)
- ❑ **BSSS** Type 304 S.S. Bird Screen.
- ❑ **BSN** No Bird Screen.
- ❑ **ISA** Aluminum Insect Screen.
- ❑ **ISSS** Type 304 S.S. Insect Screen.
- ❑ **ESI** Extended Sill.
- ❑ **PASI** Sill Pan.
- ❑ **PAAA** Perimeter Anchor Angles (Aluminum, Continuous).
- ❑ Other: _____ .

OPTIONAL FINISHES:

- ❑ **PC3** Powder Coat AAMA 2603. Color: _____ .
- ❑ **PC4** High Performance Powder Coat AAMA 2604 (Equivalent to 50% Kynar®). Color: _____ .
- ❑ **PC5** Fluoropolymer Powder Coat AAMA 2605 (Equivalent to 70% Kynar®). Color: _____ .
- ❑ **PCC** Prime Coat.
- ❑ **AN04** Clear Anodized 204-R1.
- ❑ **AN15** Clear Anodized 215-R1.
- ❑ **ANLB** Light Bronze.
- ❑ **ANMB** Medium Bronze.
- ❑ **ANDB** Dark Bronze.
- ❑ **ANBK** Black.

For Installation Instructions, see approved NOA.

SCHEDULE TYPE:	Page 1 of 3			
PROJECT:	Dimensions are in inches (mm).			
ENGINEER:	**DATE**	**B SERIES**	**SUPERSEDES**	**DRAWING NO.**
CONTRACTOR:	**9 - 9 - 26**	**1600**	**6 - 30 - 26**	**1603WDVM**

Nailor Industries Inc. reserves the right to change any information concerning product or pricing without notice.

Nailor® Industries Inc.

EXTRUDED ALUMINUM STATIONARY LOUVER
MIAMI-DADE QUALIFIED • FLORIDA PRODUCT APPROVED
HIGH VELOCITY WIND-DRIVEN RAIN RESISTANT
3" (76) DEEP • VERTICAL BLADE • PERFORMANCE DATA
MODEL: 1603WDVM

FREE AREA in Square Feet and Square Meters

Height in Inches and Meters	Width in Inches and Meters								
	12 0.30	**18** 0.46	**24** 0.61	**30** 0.76	**36** 0.91	**42** 1.07	**48** 1.22	**54** 1.37	**60** 1.52
12 0.30	**0.23** 0.02	**0.39** 0.04	**0.53** 0.05	**0.69** 0.06	**0.85** 0.08	**1.01** 0.09	**1.17** 0.11	**1.33** 0.12	**1.49** 0.14
18 0.46	**0.47** 0.04	**0.80** 0.07	**1.08** 0.10	**1.41** 0.13	**1.74** 0.16	**2.06** 0.19	**2.39** 0.22	**2.72** 0.25	**3.05** 0.28
24 0.61	**0.71** 0.07	**1.20** 0.11	**1.63** 0.15	**2.13** 0.20	**2.62** 0.24	**3.12** 0.29	**3.61** 0.34	**4.11** 0.38	**4.61** 0.43
30 0.76	**0.95** 0.09	**1.61** 0.15	**2.18** 0.20	**2.85** 0.26	**3.51** 0.33	**4.17** 0.39	**4.84** 0.45	**5.50** 0.51	**6.16** 0.57
36 0.91	**1.19** 0.11	**2.02** 0.19	**2.73** 0.25	**3.56** 0.33	**4.40** 0.41	**5.23** 0.49	**6.06** 0.56	**6.89** 0.64	**7.72** 0.72
42 1.07	**1.43** 0.13	**2.43** 0.23	**3.28** 0.31	**4.28** 0.40	**5.28** 0.49	**6.28** 0.58	**7.28** 0.68	**8.28** 0.77	**9.28** 0.86
48 1.22	**1.67** 0.15	**2.83** 0.26	**3.83** 0.36	**5.00** 0.46	**6.17** 0.57	**7.34** 0.68	**8.50** 0.79	**9.67** 0.90	**10.84** 1.01
54 1.37	**1.91** 0.18	**3.24** 0.30	**4.39** 0.41	**5.72** 0.53	**7.05** 0.66	**8.39** 0.78	**9.72** 0.90	**11.06** 1.03	**12.39** 1.15
60 1.52	**2.15** 0.20	**3.65** 0.34	**4.94** 0.46	**6.44** 0.60	**7.94** 0.74	**9.44** 0.88	**10.95** 1.02	**12.45** 1.16	**13.95** 1.30
66 1.68	**2.39** 0.22	**4.06** 0.38	**5.49** 0.51	**7.16** 0.66	**8.83** 0.82	**10.50** 0.98	**12.17** 1.13	**13.84** 1.29	**15.51** 1.44
72 1.83	**2.63** 0.24	**4.46** 0.41	**6.04** 0.56	**7.88** 0.73	**9.71** 0.90	**11.55** 1.07	**13.39** 1.24	**15.23** 1.41	**17.07** 1.59
78 1.98	**2.87** 0.27	**4.87** 0.45	**6.59** 0.61	**8.60** 0.80	**10.60** 0.98	**12.61** 1.17	**14.61** 1.36	**16.62** 1.54	**18.62** 1.73
84 2.13	**3.10** 0.29	**5.28** 0.49	**7.14** 0.66	**9.31** 0.87	**11.49** 1.07	**13.66** 1.27	**15.83** 1.47	**18.01** 1.67	**20.18** 1.87
90 2.29	**3.34** 0.31	**5.69** 0.53	**7.69** 0.71	**10.03** 0.93	**12.37** 1.15	**14.71** 1.37	**17.06** 1.58	**19.40** 1.80	**21.74** 2.02
96 2.44	**3.58** 0.33	**6.09** 0.57	**8.24** 0.77	**10.75** 1.00	**13.26** 1.23	**15.77** 1.46	**18.28** 1.70	**20.79** 1.93	**23.29** 2.16
102 2.59	**3.82** 0.36	**6.50** 0.60	**8.79** 0.82	**11.47** 1.07	**14.15** 1.31	**16.82** 1.56	**19.50** 1.81	**22.18** 2.06	**24.85** 2.31
108 2.74	**4.06** 0.38	**6.91** 0.64	**9.34** 0.87	**12.19** 1.13	**15.03** 1.40	**17.88** 1.66	**20.72** 1.92	**23.57** 2.19	**26.41** 2.45
114 2.90	**4.30** 0.40	**7.31** 0.68	**9.90** 0.92	**12.91** 1.20	**15.92** 1.48	**18.93** 1.76	**21.94** 2.04	**24.95** 2.32	**27.97** 2.60
120 3.05	**4.54** 0.42	**7.72** 0.72	**10.45** 0.97	**13.63** 1.27	**16.81** 1.56	**19.99** 1.86	**23.16** 2.15	**26.34** 2.45	**29.52** 2.74

SCHEDULE TYPE:	Page 2 of 3			
PROJECT:	Dimensions are in inches (mm).			
ENGINEER:	**DATE**	**B SERIES**	**SUPERSEDES**	**DRAWING NO.**
CONTRACTOR:	**9 - 9 - 26**	**1600**	**3 - 27 - 26**	**1603WDVM**

Nailor Industries Inc. reserves the right to change any information concerning product or pricing without notice.

EXTRUDED ALUMINUM STATIONARY LOUVER
MIAMI-DADE QUALIFIED • FLORIDA PRODUCT APPROVED
HIGH VELOCITY WIND-DRIVEN RAIN RESISTANT
3" (76) DEEP • VERTICAL BLADE • PERFORMANCE DATA
MODEL: 1603WDVM

AIRFLOW / WATER PENETRATION DATA
for 48" x 48" (1219 x 1219) Louver Size

	Free Area %	53%
	Free Area sq. ft. (sq. m.)	8.50 (0.79)
INTAKE	Free Area Velocity at Point of Beginning Water Penetration at .01 oz./sq. ft. (3 ml/sq. m) (15 min. test duration)	1250 fpm (381 m/min.)*
INTAKE	Air Volume at 1250 fpm Free Area Velocity	10,625 cfm (5014 l/s)
INTAKE	Pressure Drop @ 1250 fpm	.24 in. w.g. (60 Pa)

NOTE: To minimize water penetration when sizing intake louvers, select a Free Area Velocity that is **below** the beginning point of water penetration.*Maximum Free Area Velocity tested is 1250 fpm. Beginning point of water penetration for this model is above 1250 fpm.

WIND DRIVEN RAIN PERFORMANCE

Core Ventilation Rate in fpm (m/s)	0 (0.00)	98 (0.50)	197 (1.00)	295 (1.50)	393 (2.00)	492 (2.50)	590 (3.00)	688 (3.50)	791 (4.02)	888 (4.51)	986 (5.01)
Free Area Ventilation Rate in fpm (m/s)	0 (0.00)	164 (0.83)	328 (1.66)	491 (2.49)	655 (3.33)	819 (4.16)	983 (4.99)	1146 (5.82)	1291 (6.56)	1449 (7.36)	1612 (8.19)
Effectiveness Ratio (%)	100	100	100	100	100	100	100	100	100	100	99.9
Penetration Class	A	A	A	A	A	A	A	A	A	A	A

Test was based on a 39.375" x 39.375" (1.0 m x 1.0 m) core area louver tested at a rainfall rate of 3" per hour (76 mm/hour) with a wind velocity of **29 mph (13 m/s).**

Core Ventilation Rate in fpm (m/s)	0 (0.00)	95 (0.48)	192 (0.98)	292 (1.48)	381 (1.94)	474 (2.41)	576 (2.93)	663 (3.37)	764 (3.88)	863 (4.38)	955 (4.85)
Free Area Ventilation Rate in fpm (m/s)	0 (0.00)	159 (0.81)	319 (1.62)	485 (2.47)	635 (3.22)	789 (4.01)	958 (4.87)	1103 (5.60)	1271 (6.46)	1406 (7.14)	1556 (7.90)
Effectiveness Ratio (%)	100	100	100	100	100	100	100	100	100	100	100
Penetration Class	A	A	A	A	A	A	A	A	A	A	A

Test was based on a 39.375" x 39.375" (1.0 m x 1.0 m) core area louver tested at a rainfall rate of 8" per hour (203 mm/hour) with a wind velocity of **50 mph (22 m/s).**

Wind Driven Rain Penetration Classes	
Class	Effectiveness
A	1 to 0.99
B	0.989 to .95
C	0.949 to .80
D	Below 0.80

PRESSURE DROP

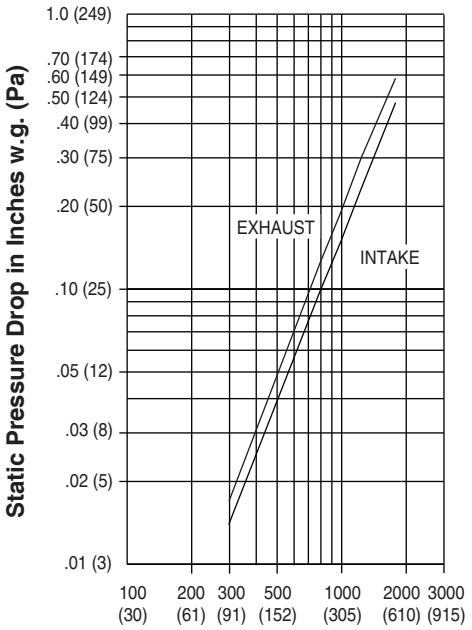

Air Velocity in Feet (Meters) Per Minute Through Free Area

Louver test size: 48" x 48" (1219 x 1219 mm).
Standard air density @ 0.075 lbs/ft³.
Tested to AMCA Fig. 5.5 – 6.5.

amca INTERNATIONAL LISTED
HIGH VELOCITY RAIN RESISTANT WITH BLADES FULLY OPEN AND IMPACT RESISTANT LOUVER
Basic Protection Level D
See www.AMCA.org for all certified or listed products
This label does not signify AMCA airflow performance certification.

amca WORLDWIDE CERTIFIED RATINGS — WATER PENETRATION, AIR PERFORMANCE, WIND DRIVEN RAIN — AIR MOVEMENT AND CONTROL ASSOCIATION INTERNATIONAL, INC. www.amca.org

Nailor Industries Inc. certifies that the Model 1603WDVM shown herein is licensed to bear the AMCA Certified Ratings Program seal. The ratings shown are based on tests and procedures performed in accordance with AMCA Publication 511 and comply with the requirements of the AMCA Certified Ratings Program. The AMCA Certified Ratings Program seal applies to Water Penetration, Wind Driven Rain, and Air Performance ratings.

Louvers were tested in accordance with AMCA Standard 500-L.

Nailor Industries Inc. certifies that the 1603WDVM louver shown herein is approved to bear the AMCA International Listing Label. The ratings shown are based on tests and procedures performed in accordance with AMCA publications and comply with the requirements of the AMCA International Listing Label program. The AMCA International Listing Label applies to pressure cycle tested wind borne debris impact resistant louvers rated for Basic Protection and +/- 120PSF with a minimum blade span of less than 12 in. (305mm) and a maximum unsupported blade span of 38 in. (97 mm) and to High Velocity Wind-Driven Rain Resistant Louvers tested in the fully open position that permits airflow through a louver.

SCHEDULE TYPE:	Page 3 of 3			
PROJECT:	Dimensions are in inches (mm).			
ENGINEER:	**DATE**	**B SERIES**	**SUPERSEDES**	**DRAWING NO.**
CONTRACTOR:	**9 - 9 - 26**	**1600**	**3 - 27 - 26**	**1603WDVM**

Nailor® Industries Inc.

EXTRUDED ALUMINUM STATIONARY HYBRID LOUVER HIGH VELOCITY WIND-DRIVEN RAIN AND IMPACT RESISTANT 5.4" (137) DEEP • HORIZONTAL AND VERTICAL BLADE MODEL: 1605H

QUALIFICATIONS:

- **AMCA 500-L (Wind-Driven Rain, Water Penetration, Air Performance).**
- **AMCA 540 (Wind-Borne Debris Impact Test [Enhanced "Level E" Protection]).**
- **AMCA 550 (High Velocity Wind-Driven Rain Resistance Test).**
- **Wind load rating +/– 70 PSF.**

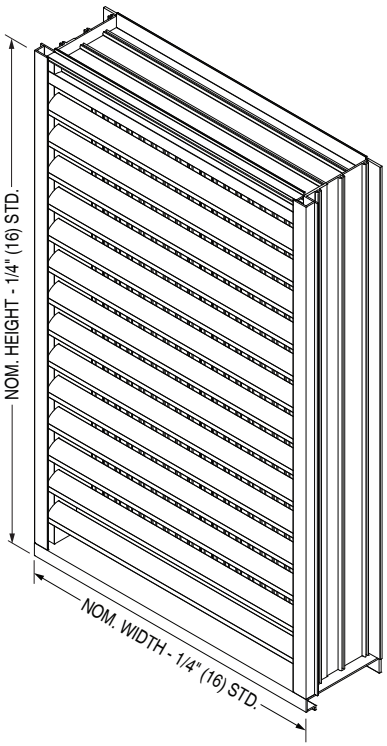

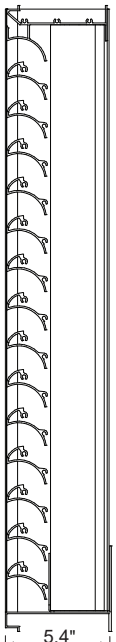

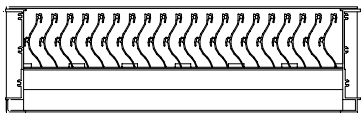

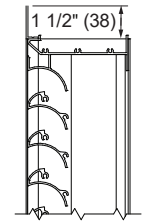

STANDARD CONSTRUCTION:

FRAME:	5.4" (137) deep, Type 6063-T6 extruded aluminum, .080" (2.03) nominal wall thickness. Integral caulking slot provided.
BLADES:	**Front:** Horizontal Type 6063-T6 extruded aluminum, .080" (2.03) nominal wall thickness, with reinforcing bosses. J style. **Rear:** Vertical Type 6063-T6 extruded aluminum, .060" (1.52) nominal wall thickness, with reinforcing bosses.
BLADE SPACING:	**Front:** Approximately 1.965" (50) on centers. **Rear:** Approximately .875" (22) on centers.
BLADE SUPPORT:	2.5" (64) strap every 60" (1524) or less in height
SCREEN:	3/4" x .050 (19 x 1.3) expanded, flattened aluminum bird screen in removable frame, inside (rear) mount (adds approximately 3/8" [10] to louver depth).
FINISH:	Mill.
MINIMUM SIZE:	12" W x 12" H (305 x 305).
MAX. SINGLE	60" W x 120" H (1524 x 3048).
SECTION SIZE:	50 ft^2 (4.6 m^2). Larger louvers will require field assembly of smaller sections.
MAXIMUM SIZE:	Unlimited Width x 120" H (3048).

OPTIONS:

- ❑ **BSSS** Type 304 S.S. Bird Screen.
- ❑ **BSN** No Bird Screen.
- ❑ **ISSS** Type 304 S.S. Insect Screen.
- ❑ **ISA** Aluminum Insect Screen.
- ❑ **FL15** Flanged Frame, 1 1/2" (38).
- ❑ **FL20** Flanged Frame, 2" (51).
- ❑ **PASI** Sill Pan.
- ❑ **PAAA** Perimeter Anchor Angles (Aluminum, Continuous).
- ❑ Other: _____ .

OPTIONAL FINISHES:

- ❑ **PC3** Powder Coat AAMA 2603. Color: _____ .
- ❑ **PC4** High Performance Powder Coat AAMA 2604 (Equivalent to 50% Kynar®). Color: _____ .
- ❑ **PC5** Fluoropolymer Powder Coat AAMA 2605 (Equivalent to 70% Kynar®). Color: _____ .
- ❑ **PCC** Prime Coat.
- ❑ **AN04** Clear Anodized 204-R1.
- ❑ **AN15** Clear Anodized 215-R1.
- ❑ **ANLB** Light Bronze.
- ❑ **ANMB** Medium Bronze.
- ❑ **ANDB** Dark Bronze.
- ❑ **ANBK** Black.

SCHEDULE TYPE:	Page 1 of 3			
PROJECT:	Dimensions are in inches (mm).			
ENGINEER:	**DATE**	**B SERIES**	**SUPERSEDES**	**DRAWING NO.**
CONTRACTOR:	**06 - 01 - 26**	**1600M**	**04 - 09 - 26**	**1605H**

Nailor Industries Inc. reserves the right to change any information concerning product or pricing without notice.

Nailor® Industries Inc.

EXTRUDED ALUMINUM STATIONARY HYBRID LOUVER
HIGH VELOCITY WIND-DRIVEN RAIN AND IMPACT RESISTANT
5.4" (137) DEEP • HORIZONTAL AND VERTICAL BLADE
PERFORMANCE DATA
MODEL: 1605H

FREE AREA in Square Feet and Square Meters

Height in Inches and Meters	Width in Inches and Meters								
	12 0.30	**18** 0.46	**24** 0.61	**30** 0.76	**36** 0.91	**42** 1.07	**48** 1.22	**54** 1.37	**60** 1.52
12 0.30	**0.22** 0.02	**0.38** 0.04	**0.51** 0.05	**0.67** 0.06	**0.82** 0.08	**0.98** 0.09	**1.13** 0.11	**1.29** 0.12	**1.44** 0.13
18 0.46	**0.45** 0.04	**0.77** 0.07	**1.04** 0.10	**1.36** 0.13	**1.67** 0.16	**1.99** 0.18	**2.31** 0.21	**2.62** 0.24	**2.94** 0.27
24 0.61	**0.68** 0.06	**1.16** 0.11	**1.57** 0.15	**2.05** 0.19	**2.53** 0.23	**3.00** 0.28	**3.48** 0.32	**3.96** 0.37	**4.44** 0.41
30 0.76	**0.91** 0.08	**1.55** 0.14	**2.10** 0.20	**2.74** 0.25	**3.38** 0.31	**4.02** 0.37	**4.66** 0.43	**5.30** 0.49	**5.94** 0.55
36 0.36	**1.14** 0.11	**1.94** 0.18	**2.63** 0.24	**3.43** 0.32	**4.23** 0.39	**5.03** 0.47	**5.83** 0.54	**6.63** 0.62	**7.43** 0.69
42 1.07	**1.37** 0.13	**2.34** 0.22	**3.16** 0.29	**4.12** 0.38	**5.08** 0.47	**6.05** 0.56	**7.01** 0.65	**7.97** 0.74	**8.93** 0.83
48 1.22	**1.60** 0.15	**2.73** 0.25	**3.69** 0.34	**4.81** 0.45	**5.94** 0.55	**7.06** 0.66	**8.18** 0.76	**9.31** 0.86	**10.43** 0.97
54 1.37	**1.83** 0.17	**3.12** 0.29	**4.22** 0.39	**5.50** 0.51	**6.79** 0.63	**8.07** 0.75	**9.36** 0.87	**10.64** 0.99	**11.93** 1.11
60 1.52	**2.07** 0.19	**3.51** 0.33	**4.75** 0.44	**6.20** 0.58	**7.64** 0.71	**9.09** 0.84	**10.53** 0.98	**11.98** 1.11	**13.42** 1.25
66 1.68	**2.30** 0.21	**3.90** 0.36	**5.28** 0.49	**6.89** 0.64	**8.49** 0.79	**10.10** 0.94	**11.71** 1.09	**13.32** 1.24	**14.92** 1.39
72 1.83	**2.53** 0.23	**4.29** 0.40	**5.81** 0.54	**7.58** 0.70	**9.35** 0.87	**11.11** 1.03	**12.88** 1.20	**14.65** 1.36	**16.42** 1.53
78 1.98	**2.76** 0.26	**4.69** 0.44	**6.34** 0.59	**8.27** 0.77	**10.20** 0.95	**12.13** 1.13	**14.06** 1.31	**15.99** 1.49	**17.92** 1.66
84 2.13	**2.99** 0.28	**5.08** 0.47	**6.87** 0.64	**8.96** 0.83	**11.05** 1.03	**13.14** 1.22	**15.23** 1.42	**17.32** 1.61	**19.42** 1.80
90 2.29	**3.22** 0.30	**5.47** 0.51	**7.40** 0.69	**9.65** 0.90	**11.90** 1.11	**14.16** 1.32	**16.41** 1.52	**18.66** 1.73	**20.91** 1.94
96 2.44	**3.45** 0.32	**5.86** 0.54	**7.93** 0.74	**10.34** 0.96	**12.76** 1.19	**15.17** 1.41	**17.58** 1.63	**20.00** 1.86	**22.41** 2.08
102 2.59	**3.68** 0.34	**6.25** 0.58	**8.46** 0.79	**11.03** 1.03	**13.61** 1.26	**16.18** 1.50	**18.76** 1.74	**21.33** 1.98	**23.91** 2.22
108 2.74	**3.91** 0.36	**6.64** 0.62	**8.99** 0.84	**11.73** 1.09	**14.46** 1.34	**17.20** 1.60	**19.93** 1.85	**22.67** 2.11	**25.41** 2.36
114 2.90	**4.14** 0.38	**7.04** 0.65	**9.52** 0.88	**12.42** 1.15	**15.31** 1.42	**18.21** 1.69	**21.11** 1.96	**24.01** 2.23	**26.90** 2.50
120 3.05	**4.37** 0.41	**7.43** 0.69	**10.05** 0.93	**13.11** 1.22	**16.17** 1.50	**19.23** 1.79	**22.28** 2.07	**25.34** 2.35	**28.40** 2.64

amca WORLDWIDE CERTIFIED RATINGS — WATER PENETRATION, AIR PERFORMANCE, WIND DRIVEN RAIN — AIR MOVEMENT AND CONTROL ASSOCIATION INTERNATIONAL, INC. www.amca.org

amca INTERNATIONAL LISTED — HIGH VELOCITY RAIN RESISTANT WITH BLADES FULLY OPEN AND IMPACT RESISTANT LOUVER *Enhanced Protection Level E* — See www.AMCA.org for all certified or listed products. This label does not signify AMCA airflow performance certification.

SCHEDULE TYPE:	Page 2 of 3			
PROJECT:	Dimensions are in inches (mm).			
ENGINEER:	**DATE**	**B SERIES**	**SUPERSEDES**	**DRAWING NO.**
CONTRACTOR:	**06 - 01 - 26**	**1600M**	**04 - 09 - 26**	**1605H**

Nailor Industries Inc. reserves the right to change any information concerning product or pricing without notice.

Nailor® Industries Inc.

EXTRUDED ALUMINUM STATIONARY HYBRID LOUVER
HIGH VELOCITY WIND-DRIVEN RAIN AND IMPACT RESISTANT
5.4" (137) DEEP • HORIZONTAL AND VERTICAL BLADE
PERFORMANCE DATA
MODEL: 1605H

AIRFLOW / WATER PENETRATION DATA
for 48" x 48" (1219 x 1219) Louver Size

Free Area %		51%
Free Area sq. ft. (sq. m.)		8.18 (0.76)
INTAKE	Free Area Velocity at Point of Beginning Water Penetration at .01 oz./sq. ft. (3 ml/sq. m) (15 min. test duration)	1250 fpm (381 m/min.)
INTAKE	Air Volume at 1250 fpm Free Area Velocity	10,225 cfm (4826 l/s)
INTAKE	Pressure Drop @ 1250 fpm	.66 in. w.g. (164 Pa)

NOTE: To minimize water penetration when sizing intake louvers, select a Free Area Velocity that is **below** the beginning point of water penetration.

WIND DRIVEN RAIN PERFORMANCE

Core Ventilation Rate in fpm (m/s)	0 (0.00)	98 (0.50)	197 (1.00)	295 (1.50)	393 (2.00)	492 (2.50)	590 (3.00)	688 (3.50)	787 (4.00)	889 (4.52)	975 (4.95)
Free Area Ventilation Rate in fpm (m/s)	0 (0.00)	169 (0.86)	339 (1.72)	508 (2.58)	678 (3.44)	848 (4.31)	1017 (5.17)	1186 (6.02)	1355 (6.88)	1498 (7.61)	1644 (8.35)
Effectiveness Ratio (%)	100	100	100	100	100	100	100	100	100	100	99.8
Penetration Class	A	A	A	A	A	A	A	A	A	A	A

Test was based on a 39.375" x 39.375" (1.0 m x 1.0 m) core area louver tested at a rainfall rate of 3" per hour (76 mm/hour) with a wind velocity of **29 mph (13 m/s).**

Core Ventilation Rate in fpm (m/s)	0 (0.00)	94 (0.48)	190 (0.97)	291 (1.48)	398 (2.02)	477 (2.42)	576 (2.93)	677 (3.44)	762 (3.87)	867 (4.40)	948 (4.82)
Free Area Ventilation Rate in fpm (m/s)	0 (0.00)	161 (0.82)	327 (1.66)	501 (2.55)	685 (3.48)	821 (4.17)	993 (5.04)	1166 (5.92)	1285 (6.53)	1473 (7.48)	1611 (8.18)
Effectiveness Ratio (%)	100	100	100	100	100	100	100	100	99.8	99.7	99.6
Penetration Class	A	A	A	A	A	A	A	A	A	A	A

Test was based on a 39.375" x 39.375" (1.0 m x 1.0 m) core area louver tested at a rainfall rate of 8" per hour (203 mm/hour) with a wind velocity of **50 mph (22 m/s).**

Wind Driven Rain Penetration Classes	
Class	Effectiveness
A	1 to 0.99
B	0.989 to .95
C	0.949 to .80
D	Below 0.80

PRESSURE DROP

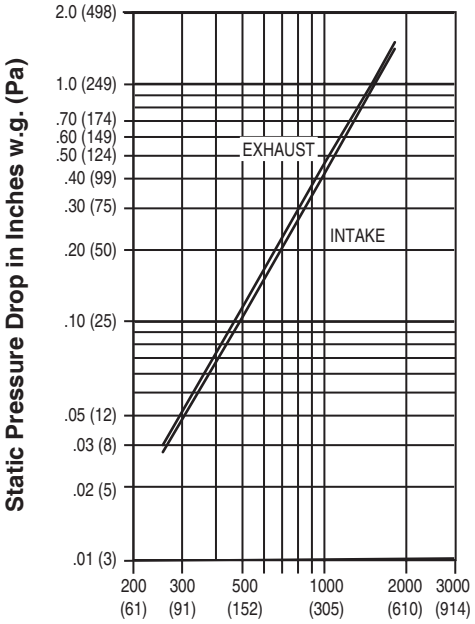

Air Velocity in Feet (Meters) Per Minute Through Free Area

Louver test size: 48" x 48" (1219 x 1219 mm).
Standard air density @ 0.075 lbs/ft³.
Tested to AMCA Fig. 5.5 – 6.5.

amca INTERNATIONAL LISTED
HIGH VELOCITY RAIN RESISTANT WITH BLADES FULLY OPEN AND IMPACT RESISTANT LOUVER
Enhanced Protection Level E
See www.AMCA.org for all certified or listed products
This **label** does not signify AMCA airflow performance certification.

amca WORLDWIDE CERTIFIED RATINGS — WATER PENETRATION — AIR PERFORMANCE — WIND DRIVEN RAIN — www.amca.org — AIR MOVEMENT AND CONTROL ASSOCIATION INTERNATIONAL, INC.

Nailor Industries Inc. certifies that the Model 1605H shown herein is licensed to bear the AMCA Certified Ratings Program seal. The ratings shown are based on tests and procedures performed in accordance with AMCA Publication 511 and comply with the requirements of the AMCA Certified Ratings Program. The AMCA Certified Ratings Program seal applies to Water Penetration, Wind Driven Rain, and Air Performance ratings.

Louvers were tested in accordance with AMCA Standard 500-L.

Nailor Industries Inc. certifies that the 1605H louver shown herein is approved to bear the AMCA International Listing Label. The ratings shown are based on tests and procedures performed in accordance with AMCA publications and comply with the requirements of the AMCA International Listing Label program. The AMCA International Listing Label applies to wind borne debris impact resistant louvers rated for Enhanced Protection and +/- 70PSF with a minimum blade span of less than 12 in. (305mm) and a maximum unsupported blade span of 58 in. (1473 mm) and to High Velocity Wind-Driven Rain Resistant Louvers tested in the fully open position that permits airflow through a louver.

Dimensions are in inches (mm).

SCHEDULE TYPE:				
PROJECT:				
ENGINEER:	**DATE**	**B SERIES**	**SUPERSEDES**	**DRAWING NO.**
CONTRACTOR:	**06 - 01 - 26**	**1600M**	**04 - 09 - 26**	**1605H**

Nailor Industries Inc. reserves the right to change any information concerning product or pricing without notice.

Nailor® Industries Inc.

EXTRUDED ALUMINUM STATIONARY HYBRID LOUVER
MIAMI-DADE QUALIFED • FLORIDA PRODUCT APPROVED
HIGH VELOCITY WIND-DRIVEN RAIN RESISTANT
5.4" (137) DEEP • HORIZONTAL AND VERTICAL BLADE
MODEL: 1605HM

QUALIFICATIONS:

- **Miami-Dade County NOA No. 26-0518.11**
- **Florida Product Approval No. PENDING**
- **Tested in accordance with: TAS-201 (Missile Impact Test), TAS-202 (Uniform Static Air Pressure Test), TAS-203 (Cyclic Wind Pressure Loading Test.)**
- **AMCA 500-L (Wind-Drive Rain, Water Penetration, Air Performance)**
- **AMCA 540 (Wind-Borne Debris Impact Test [Enhanced "Level E" Protection]).**
- **AMCA 550 (High Velocity Wind-Driven Rain Resistance Test).**
- **Wind load rating +/– 100 PSF**

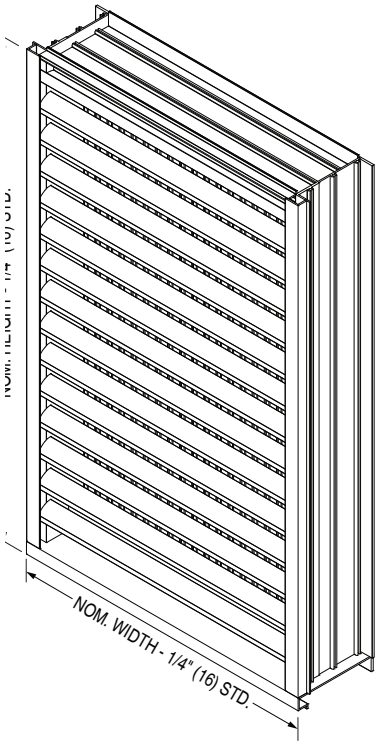

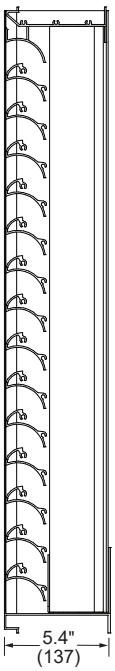

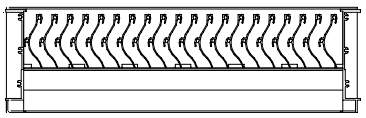

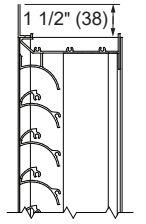

OPT. FLANGED FRAME
(FL15 STD.)

STANDARD CONSTRUCTION:

FRAME:	5.4" (137) deep, Type 6063-T6 extruded aluminum, .080" (2.03) nominal wall thickness. Integral caulking slot provided.
BLADES:	**Front:** Horizontal Type 6063-T6 extruded aluminum, .080" (2.03) nominal wall thickness, with reinforcing bosses. J style. **Rear:** Vertical Type 6063-T6 extruded aluminum, .060" (1.52) nominal wall thickness, with reinforcing bosses.
BLADE SPACING:	**Front:** Approximately 1.965" (50) on centers. **Rear:** Approximately .875" (22) on centers.
BLADE SUPPORT:	2.5" (64) strap every 60" (1524) or less in height
SCREEN:	3/4" x .050 (19 x 1.3) expanded, flattened aluminum bird screen in removable frame, inside (rear) mount (adds approximately 3/8" [10] to louver depth).
FINISH:	Mill.
MINIMUM SIZE:	12" W x 12" H (305 x 305).
MAX. SINGLE	60" W x 120" H (1524 x 3048).
SECTION SIZE:	50 ft^2 (4.6 m^2). Larger louvers will require field assembly of smaller sections.
MAXIMUM SIZE:	Unlimited Width x 120" H (3048).

OPTIONS:

- ❑ **BSSS** Type 304 S.S. Bird Screen.
- ❑ **BSN** No Bird Screen.
- ❑ **ISSS** Type 304 S.S. Insect Screen.
- ❑ **ISA** Aluminum Insect Screen.
- ❑ **FL15** Flanged Frame, 1 1/2" (38).
- ❑ **FL20** Flanged Frame, 2" (51).
- ❑ **PASI** Sill Pan.
- ❑ **PAAA** Perimeter Anchor Angles (Aluminum, Continuous).
- ❑ Other: _____ .

OPTIONAL FINISHES:

- ❑ **PC3** Powder Coat AAMA 2603. Color: _____ .
- ❑ **PC4** High Performance Powder Coat AAMA 2604 (Equivalent to 50% Kynar®). Color: _____ .
- ❑ **PC5** Fluoropolymer Powder Coat AAMA 2605 (Equivalent to 70% Kynar®). Color: _____ .
- ❑ **PCC** Prime Coat.
- ❑ **AN04** Clear Anodized 204-R1.
- ❑ **AN15** Clear Anodized 215-R1.
- ❑ **ANLB** Light Bronze.
- ❑ **ANMB** Medium Bronze.
- ❑ **ANDB** Dark Bronze.
- ❑ **ANBK** Black.

SCHEDULE TYPE:	Page 1 of 3 Dimensions are in inches (mm).			
PROJECT:				
ENGINEER:	**DATE**	**B SERIES**	**SUPERSEDES**	**DRAWING NO.**
CONTRACTOR:	**6 - 29 - 26**	**1600M**	**6 - 1 - 26**	**1605HM**

Nailor Industries Inc. reserves the right to change any information concerning product or pricing without notice.

Nailor® Industries Inc.

EXTRUDED ALUMINUM STATIONARY HYBRID LOUVER
MIAMI-DADE QUALIFED • FLORIDA PRODUCT APPROVED
HIGH VELOCITY WIND-DRIVEN RAIN RESISTANT
5.4" (137) DEEP • HORIZONTAL AND VERTICAL BLADE
PERFORMANCE DATA
MODEL: 1605HM

FREE AREA in Square Feet and Square Meters

Height in Inches and Meters	Width in Inches and Meters								
	12 0.30	**18** 0.46	**24** 0.61	**30** 0.76	**36** 0.91	**42** 1.07	**48** 1.22	**54** 1.37	**60** 1.52
12 0.30	**0.22** 0.02	**0.38** 0.04	**0.51** 0.05	**0.67** 0.06	**0.82** 0.08	**0.98** 0.09	**1.13** 0.11	**1.29** 0.12	**1.44** 0.13
18 0.46	**0.45** 0.04	**0.77** 0.07	**1.04** 0.10	**1.36** 0.13	**1.67** 0.16	**1.99** 0.18	**2.31** 0.21	**2.62** 0.24	**2.94** 0.27
24 0.61	**0.68** 0.06	**1.16** 0.11	**1.57** 0.15	**2.05** 0.19	**2.53** 0.23	**3.00** 0.28	**3.48** 0.32	**3.96** 0.37	**4.44** 0.41
30 0.76	**0.91** 0.08	**1.55** 0.14	**2.10** 0.20	**2.74** 0.25	**3.38** 0.31	**4.02** 0.37	**4.66** 0.43	**5.30** 0.49	**5.94** 0.55
36 0.36	**1.14** 0.11	**1.94** 0.18	**2.63** 0.24	**3.43** 0.32	**4.23** 0.39	**5.03** 0.47	**5.83** 0.54	**6.63** 0.62	**7.43** 0.69
42 1.07	**1.37** 0.13	**2.34** 0.22	**3.16** 0.29	**4.12** 0.38	**5.08** 0.47	**6.05** 0.56	**7.01** 0.65	**7.97** 0.74	**8.93** 0.83
48 1.22	**1.60** 0.15	**2.73** 0.25	**3.69** 0.34	**4.81** 0.45	**5.94** 0.55	**7.06** 0.66	**8.18** 0.76	**9.31** 0.86	**10.43** 0.97
54 1.37	**1.83** 0.17	**3.12** 0.29	**4.22** 0.39	**5.50** 0.51	**6.79** 0.63	**8.07** 0.75	**9.36** 0.87	**10.64** 0.99	**11.93** 1.11
60 1.52	**2.07** 0.19	**3.51** 0.33	**4.75** 0.44	**6.20** 0.58	**7.64** 0.71	**9.09** 0.84	**10.53** 0.98	**11.98** 1.11	**13.42** 1.25
66 1.68	**2.30** 0.21	**3.90** 0.36	**5.28** 0.49	**6.89** 0.64	**8.49** 0.79	**10.10** 0.94	**11.71** 1.09	**13.32** 1.24	**14.92** 1.39
72 1.83	**2.53** 0.23	**4.29** 0.40	**5.81** 0.54	**7.58** 0.70	**9.35** 0.87	**11.11** 1.03	**12.88** 1.20	**14.65** 1.36	**16.42** 1.53
78 1.98	**2.76** 0.26	**4.69** 0.44	**6.34** 0.59	**8.27** 0.77	**10.20** 0.95	**12.13** 1.13	**14.06** 1.31	**15.99** 1.49	**17.92** 1.66
84 2.13	**2.99** 0.28	**5.08** 0.47	**6.87** 0.64	**8.96** 0.83	**11.05** 1.03	**13.14** 1.22	**15.23** 1.42	**17.32** 1.61	**19.42** 1.80
90 2.29	**3.22** 0.30	**5.47** 0.51	**7.40** 0.69	**9.65** 0.90	**11.90** 1.11	**14.16** 1.32	**16.41** 1.52	**18.66** 1.73	**20.91** 1.94
96 2.44	**3.45** 0.32	**5.86** 0.54	**7.93** 0.74	**10.34** 0.96	**12.76** 1.19	**15.17** 1.41	**17.58** 1.63	**20.00** 1.86	**22.41** 2.08
102 2.59	**3.68** 0.34	**6.25** 0.58	**8.46** 0.79	**11.03** 1.03	**13.61** 1.26	**16.18** 1.50	**18.76** 1.74	**21.33** 1.98	**23.91** 2.22
108 2.74	**3.91** 0.36	**6.64** 0.62	**8.99** 0.84	**11.73** 1.09	**14.46** 1.34	**17.20** 1.60	**19.93** 1.85	**22.67** 2.11	**25.41** 2.36
114 2.90	**4.14** 0.38	**7.04** 0.65	**9.52** 0.88	**12.42** 1.15	**15.31** 1.42	**18.21** 1.69	**21.11** 1.96	**24.01** 2.23	**26.90** 2.50
120 3.05	**4.37** 0.41	**7.43** 0.69	**10.05** 0.93	**13.11** 1.22	**16.17** 1.50	**19.23** 1.79	**22.28** 2.07	**25.34** 2.35	**28.40** 2.64

amca WORLDWIDE CERTIFIED RATINGS — WATER PENETRATION, AIR PERFORMANCE, WIND DRIVEN RAIN — AIR MOVEMENT AND CONTROL ASSOCIATION INTERNATIONAL, INC. www.amca.org

amca INTERNATIONAL LISTED — HIGH VELOCITY RAIN RESISTANT WITH BLADES FULLY OPEN AND IMPACT RESISTANT LOUVER *Enhanced Protection Level E* — See www.AMCA.org for all certified or listed products. This label does not signify AMCA airflow performance certification.

SCHEDULE TYPE:	Page 2 of 3			
PROJECT:	Dimensions are in inches (mm).			
ENGINEER:	**DATE**	**B SERIES**	**SUPERSEDES**	**DRAWING NO.**
CONTRACTOR:	**6 - 29 - 26**	**1600M**	**6 - 1 - 26**	**1605HM**

Nailor Industries Inc. reserves the right to change any information concerning product or pricing without notice.

Nailor® Industries Inc.

EXTRUDED ALUMINUM STATIONARY HYBRID LOUVER
MIAMI-DADE QUALIFED • FLORIDA PRODUCT APPROVED
HIGH VELOCITY WIND-DRIVEN RAIN RESISTANT
5.4" (137) DEEP • HORIZONTAL AND VERTICAL BLADE
PERFORMANCE DATA
MODEL: 1605HM

AIRFLOW/ WATER PENETRATION DATA
for 48" x 48" (1219 x 1219) Louver Size

Free Area %		51%
Free Area sq. ft. (sq. m.)		8.18 (0.76)
INTAKE	Free Area Velocity at Point of Beginning Water Penetration at .01 oz./sq. ft. (3 ml/sq. m) (15 min. test duration)	1250 fpm (381 m/min.)
INTAKE	Air Volume at 1250 fpm Free Area Velocity	10,225 cfm (4826 l/s)
INTAKE	Pressure Drop @ 1250 fpm	.66 in. w.g. (164 Pa)

NOTE: To minimize water penetration when sizing intake louvers, select a Free Area Velocity that is **below** the beginning point of water penetration.

WIND DRIVEN RAIN PERFORMANCE

Core Ventilation Rate in fpm (m/s)	0 (0.00)	98 (0.50)	197 (1.00)	295 (1.50)	393 (2.00)	492 (2.50)	590 (3.00)	688 (3.50)	787 (4.00)	889 (4.52)	975 (4.95)
Free Area Ventilation Rate in fpm (m/s)	0 (0.00)	169 (0.86)	339 (1.72)	508 (2.58)	678 (3.44)	848 (4.31)	1017 (5.17)	1186 (6.02)	1355 (6.88)	1498 (7.61)	1644 (8.35)
Effectiveness Ratio (%)	100	100	100	100	100	100	100	100	100	100	99.8
Penetration Class	A	A	A	A	A	A	A	A	A	A	A

Test was based on a 39.375" x 39.375" (1.0 m x 1.0 m) core area louver tested at a rainfall rate of 3" per hour (76 mm/hour) with a wind velocity of **29 mph (13 m/s).**

Core Ventilation Rate in fpm (m/s)	0 (0.00)	94 (0.48)	190 (0.97)	291 (1.48)	398 (2.02)	477 (2.42)	576 (2.93)	677 (3.44)	762 (3.87)	867 (4.40)	948 (4.82)
Free Area Ventilation Rate in fpm (m/s)	0 (0.00)	161 (0.82)	327 (1.66)	501 (2.55)	685 (3.48)	821 (4.17)	993 (5.04)	1166 (5.92)	1285 (6.53)	1473 (7.48)	1611 (8.18)
Effectiveness Ratio (%)	100	100	100	100	100	100	100	100	99.8	99.7	99.6
Penetration Class	A	A	A	A	A	A	A	A	A	A	A

Test was based on a 39.375" x 39.375" (1.0 m x 1.0 m) core area louver tested at a rainfall rate of 8" per hour (203 mm/hour) with a wind velocity of **50 mph (22 m/s).**

Wind Driven Rain Penetration Classes	
Class	Effectiveness
A	1 to 0.99
B	0.989 to .95
C	0.949 to .80
D	Below 0.80

PRESSURE DROP

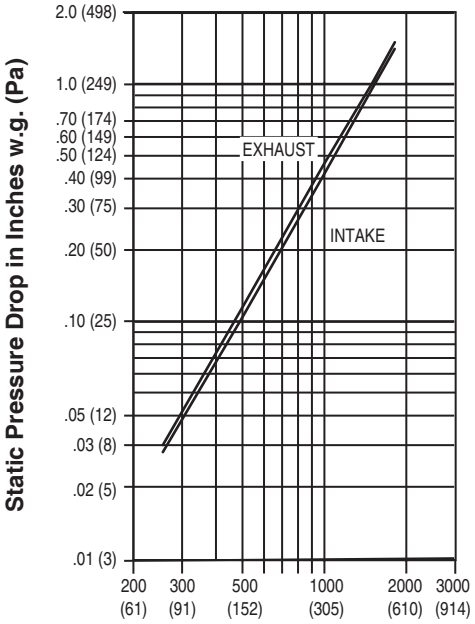

Air Velocity in Feet (Meters) Per Minute Through Free Area

Louver test size: 48" x 48" (1219 x 1219 mm).
Standard air density @ 0.075 lbs/ft³.
Tested to AMCA Fig. 5.5 – 6.5.

amca INTERNATIONAL LISTED

HIGH VELOCITY RAIN RESISTANT WITH BLADES FULLY OPEN AND IMPACT RESISTANT LOUVER
Enhanced Protection Level E
See www.AMCA.org for all certified or listed products

This **label** does not signify AMCA airflow performance certification.

amca WORLDWIDE CERTIFIED RATINGS — WATER PENETRATION — AIR PERFORMANCE — WIND DRIVEN RAIN — AIR MOVEMENT AND CONTROL ASSOCIATION INTERNATIONAL, INC. — www.amca.org

Nailor Industries Inc. certifies that the Model 1605HM shown herein is licensed to bear the AMCA Certified Ratings Program seal. The ratings shown are based on tests and procedures performed in accordance with AMCA Publication 511 and comply with the requirements of the AMCA Certified Ratings Program. The AMCA Certified Ratings Program seal applies to Water Penetration, Wind Driven Rain, and Air Performance ratings.

Louvers were tested in accordance with AMCA Standard 500-L.

Nailor Industries Inc. certifies that the 1605HM louver shown herein is approved to bear the AMCA International Listing Label. The ratings shown are based on tests and procedures performed in accordance with AMCA publications and comply with the requirements of the AMCA International Listing Label program. The AMCA International Listing Label applies to wind borne debris impact resistant louvers rated for Enhanced Protection and +/- 100PSF with a minimum blade span of less than 12 in. (305mm) and a maximum unsupported blade span of 58 in. (1473 mm) and to High Velocity Wind-Driven Rain Resistant Louvers tested in the fully open position that permits airflow through a louver.

Dimensions are in inches (mm).

SCHEDULE TYPE:				
PROJECT:				
ENGINEER:	**DATE**	**B SERIES**	**SUPERSEDES**	**DRAWING NO.**
CONTRACTOR:	**6 - 29 - 26**	**1600M**	**6 - 1 - 26**	**1605HM**

Nailor Industries Inc. reserves the right to change any information concerning product or pricing without notice.

EXTRUDED ALUMINUM STATIONARY LOUVER
WIND-DRIVEN RAIN RESISTANT
5" (127) DEEP • HORIZONTAL BLADE
MODEL: 1605WD

Nailor Industries Inc.®

Model 1605WD wind-driven rain horizontal drainable blade louver provides maximum weather protection in a 5" (127) deep frame, with pleasing sight-proof aesthetics that compliment any structure's exterior styling. Suitable for use in exhaust and low to medium velocity intake applications, the drainable head and drainable blade design divert collected water down concealed side downspouts and out the sill. Blades are reinforced with full length integral bosses for superior strength and the 5" (127) deep channel or optional flanged frame installs easily in most common wall configurations. Model 1605WD is AMCA Licensed for wind-driven rain and is engineered to be architecturally appealing as well as mechanically enduring.

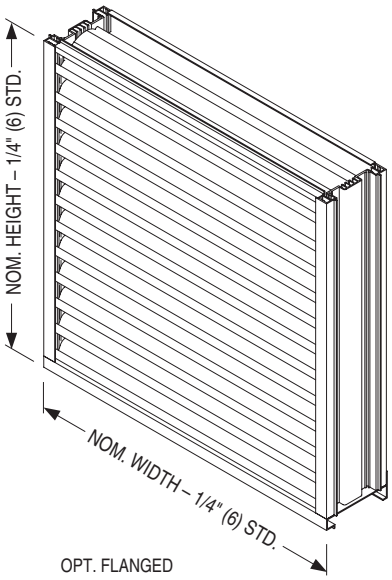

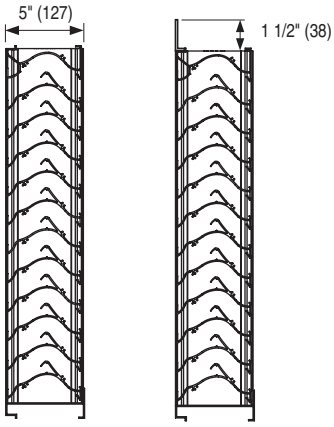

STANDARD CONSTRUCTION:

FRAME:	5" (127) deep, Type 6063-T6 extruded aluminum, .080" (2.03) nominal wall thickness. Integral downspouts and caulking slot provided.
BLADES:	Type 6063-T6 extruded aluminum, .060" (1.52) nominal wall thickness, with reinforcing bosses.
BLADE ANGLE:	Fixed at 30 degrees.
BLADE SPACING:	Approximately 2" (51) on centers.
BLADE SUPPORT:	Concealed type, factory installed on rear of louver. Size varies based on design pressure, consult Nailor.
SCREEN:	5/8" x .050 (15.9 x 1.27) expanded, flattened aluminum bird screen in removable frame, inside (rear) mount (adds approx. 3/8" [10] to louver depth).
FINISH:	Mill.
MINIMUM SIZE:	12" W x 12" H (305 x 305).
MAX. SINGLE SECTION SIZE:	120" W x 84" H (3048 x 2134) or 84" W x 120"H (2134 x 3048). 70 sq. ft. (6.5 m^2). Larger louvers will require field assembly of smaller sections.

OPTIONS:

- ❑ **FL15** Flanged Frame, 1 1/2" (38).
- ❑ **FL20** Flanged Frame, 2" (51).
- ❑ **BSSS** Type 304 S.S. Bird Screen.
- ❑ **BSN** No Bird Screen.
- ❑ **ISA** Aluminum Insect Screen.
- ❑ **ISSS** Type 304 S.S. Insect Screen.
- ❑ **ESI** Extended Sill.
- ❑ Other: _____ .

OPTIONAL FINISHES:

- ❑ **PC3** Powder Coat AAMA 2603. Color: _____ .
- ❑ **PC4** High Performance Powder Coat AAMA 2604 (Equivalent to 50% Kynar®). Color: _____ .
- ❑ **PC5** Fluoropolymer Powder Coat AAMA 2605 (Equivalent to 70% Kynar®). Color: _____ .
- ❑ **PCC** Prime Coat.
- ❑ **AN04** Clear Anodized 204-R1.
- ❑ **AN15** Clear Anodized 215-R1.
- ❑ **ANLB** Light Bronze.
- ❑ **ANMB** Medium Bronze.
- ❑ **ANDB** Dark Bronze.
- ❑ **ANBK** Black.

amca WORLDWIDE CERTIFIED RATINGS — WATER PENETRATION, AIR PERFORMANCE, WIND DRIVEN RAIN — AIR MOVEMENT AND CONTROL ASSOCIATION INTERNATIONAL, INC.® www.amca.org

For Installation Instructions, see IOM-LOUVERINSTFPA.

SCHEDULE TYPE:	Page 1 of 3			
PROJECT:	Dimensions are in inches (mm).			
ENGINEER:	**DATE**	**B SERIES**	**SUPERSEDES**	**DRAWING NO.**
CONTRACTOR:	**5 - 28 - 25**	**1600**	**1 - 30 - 24**	**1605WD**

Nailor Industries Inc. reserves the right to change any information concerning product or pricing without notice.

EXTRUDED ALUMINUM STATIONARY LOUVER WIND-DRIVEN RAIN RESISTANT • 5" (127) DEEP HORIZONTAL BLADE • PERFORMANCE DATA MODEL: 1605WD

Nailor Industries Inc.

FREE AREA in Square Feet and Square Meters

Height in Inches and Meters	Width in Inches and Meters																		
	12	18	24	30	36	42	48	54	60	66	72	78	84	90	96	102	108	114	120
	0.30	0.46	0.61	0.76	0.91	1.07	1.22	1.37	1.52	1.68	1.83	1.98	2.13	2.29	2.44	2.59	2.74	2.90	3.05
12	0.27	0.43	0.60	0.76	0.93	1.09	1.26	1.42	1.59	1.75	1.92	2.08	2.25	2.41	2.58	2.74	2.91	3.07	3.24
0.30	0.03	0.04	0.06	0.07	0.09	0.10	0.12	0.13	0.15	0.16	0.18	0.19	0.21	0.22	0.24	0.25	0.27	0.29	0.30
18	0.47	0.76	1.05	1.34	1.63	1.92	2.20	2.49	2.78	3.07	3.36	3.65	3.94	4.23	4.51	4.80	5.09	5.38	5.67
0.46	0.04	0.07	0.10	0.12	0.15	0.18	0.20	0.23	0.26	0.29	0.31	0.34	0.37	0.39	0.42	0.45	0.47	0.50	0.53
24	0.74	1.19	1.65	2.10	2.56	3.01	3.46	3.92	4.37	4.82	5.28	5.73	6.19	6.64	7.09	7.55	8.00	8.45	8.91
0.61	0.07	0.11	0.15	0.20	0.24	0.28	0.32	0.36	0.41	0.45	0.49	0.53	0.57	0.62	0.66	0.70	0.74	0.79	0.83
30	0.94	1.52	2.10	2.68	3.25	3.83	4.41	4.99	5.56	6.14	6.72	7.30	7.87	8.45	9.03	9.61	10.18	10.76	11.34
0.76	0.09	0.14	0.19	0.25	0.30	0.36	0.41	0.46	0.52	0.57	0.62	0.68	0.73	0.79	0.84	0.89	0.95	1.00	1.05
36	1.15	1.85	2.55	3.25	3.95	4.65	5.35	6.05	6.76	7.46	8.16	8.86	9.56	10.26	10.96	11.66	12.37	13.07	13.77
0.91	0.11	0.17	0.24	0.30	0.37	0.43	0.50	0.56	0.63	0.69	0.76	0.82	0.89	0.95	1.02	1.08	1.15	1.21	1.28
42	1.35	2.17	3.00	3.82	4.65	5.47	6.30	7.12	7.95	8.77	9.60	10.42	11.25	12.07	12.90	13.72	14.55	15.37	16.20
1.07	0.13	0.20	0.28	0.36	0.43	0.51	0.59	0.66	0.74	0.81	0.89	0.97	1.04	1.12	1.20	1.27	1.35	1.43	1.50
48	1.62	2.61	3.60	4.59	5.58	6.57	7.59	8.55	9.54	10.53	11.52	12.51	13.50	14.49	15.48	16.47	17.46	18.45	19.44
1.22	0.15	0.24	0.33	0.43	0.52	0.61	0.71	0.79	0.89	0.98	1.07	1.16	1.25	1.35	1.44	1.53	1.62	1.71	1.81
54	1.82	2.93	4.05	5.16	6.27	7.39	8.50	9.62	10.73	11.84	12.96	14.07	15.18	16.30	17.41	18.53	19.64	20.75	21.87
1.37	0.17	0.27	0.38	0.48	0.58	0.69	0.79	0.89	1.00	1.10	1.20	1.31	1.41	1.51	1.62	1.72	1.82	1.93	2.03
60	2.02	3.26	4.50	5.73	6.97	8.21	9.45	10.68	11.92	13.16	14.40	15.63	16.87	18.11	19.35	20.58	21.82	23.06	24.30
1.52	0.19	0.30	0.42	0.53	0.65	0.76	0.88	0.99	1.11	1.22	1.34	1.45	1.57	1.68	1.80	1.91	2.03	2.14	2.26
66	2.22	3.58	4.95	6.31	7.67	9.03	10.39	11.75	13.11	14.47	15.84	17.20	18.56	19.92	21.28	22.64	24.00	25.36	26.73
1.68	0.21	0.33	0.46	0.59	0.71	0.84	0.97	1.09	1.22	1.34	1.47	1.60	1.72	1.85	1.98	2.10	2.23	2.36	2.48
72	2.49	4.02	5.55	7.07	8.60	10.12	11.65	13.18	14.70	16.23	17.76	19.28	20.81	22.33	23.86	25.39	26.91	28.44	29.97
1.83	0.23	0.37	0.52	0.66	0.80	0.94	1.08	1.22	1.37	1.51	1.65	1.79	1.93	2.07	2.22	2.36	2.50	2.64	2.78
78	2.70	4.35	6.00	7.65	9.30	10.95	12.60	14.25	15.90	17.55	19.20	20.85	22.50	24.15	25.80	27.45	29.10	30.75	32.40
1.98	0.25	0.40	0.56	0.71	0.86	1.02	1.17	1.32	1.48	1.63	1.78	1.94	2.09	2.24	2.40	2.55	2.70	2.86	3.01
84	2.90	4.67	6.44	8.22	9.99	11.77	13.54	15.31	17.09	18.86	20.63	22.41	24.18	25.96	27.73	29.50	31.28	33.05	31.82
2.13	0.27	0.43	0.60	0.76	0.93	1.09	1.26	1.42	1.59	1.75	1.92	2.08	2.25	2.41	2.58	2.74	2.91	3.07	3.24
90	3.10	5.00	6.89	8.79	10.69	12.59	14.48	16.38	18.28	20.18	22.07	23.97	25.87						
2.29	0.29	0.46	0.64	0.82	0.99	1.17	1.35	1.52	1.70	1.87	2.05	2.23	2.40						
96	3.30	5.32	7.34	9.37	11.39	13.41	15.43	17.45	19.47	21.49	23.51	25.54	27.56						
2.44	0.31	0.49	0.68	0.87	1.06	1.25	1.43	1.62	1.81	2.00	2.18	2.37	2.56						
102	3.57	5.76	7.94	10.13	12.32	14.50	16.69	18.87	21.06	23.25	25.43	27.62	29.81						
2.59	0.33	0.53	0.74	0.94	1.14	1.35	1.55	1.75	1.96	2.16	2.36	2.57	2.77						
108	3.77	6.08	8.39	10.70	13.01	15.32	17.63	19.94	22.25	24.56	26.87	29.18	31.49						
2.74	0.35	0.57	0.78	0.99	1.21	1.42	1.64	1.85	2.07	2.28	2.50	2.71	2.93						
114	3.98	6.41	8.84	11.28	13.71	16.14	18.58	21.01	23.45	25.88	28.31	30.75	33.18						
2.90	0.37	0.60	0.82	1.05	1.27	1.50	1.73	1.95	2.18	2.40	2.63	2.86	3.08						
120	4.18	6.73	9.29	11.85	14.41	16.96	19.52	22.08	24.64	27.19	29.75	32.31	34.87						
3.05	0.39	0.63	0.86	1.10	1.34	1.58	1.81	2.05	2.29	2.53	2.76	3.00	3.24						

amca WORLDWIDE CERTIFIED RATINGS
WATER PENETRATION
AIR PERFORMANCE
WIND DRIVEN RAIN
AIR MOVEMENT AND CONTROL ASSOCIATION INTERNATIONAL, INC.
www.amca.org

SCHEDULE TYPE:	Page 2 of 3 Dimensions are in inches (mm).			
PROJECT:				
ENGINEER:	**DATE**	**B SERIES**	**SUPERSEDES**	**DRAWING NO.**
CONTRACTOR:	**5 - 28 - 25**	**1600**	**1 - 30 - 24**	**1605WD**

Nailor Industries Inc. reserves the right to change any information concerning product or pricing without notice.

EXTRUDED ALUMINUM STATIONARY LOUVER WIND-DRIVEN RAIN RESISTANT • 5" (127) DEEP HORIZONTAL BLADE • PERFORMANCE DATA MODEL: 1605WD

Nailor Industries Inc.

AIRFLOW/WATER PENETRATION DATA
for 48" x 48" (1219 x 1219) Louver Size

	Free Area %	47%
	Free Area sq. ft. (sq. m.)	7.59 (0.71)
INTAKE	Free Area Velocity at Point of Beginning Water Penetration at .01 oz./sq. ft. (3 ml/sq. m) (15 min. test duration)	1250 fpm (381 m/min.)
	Air Volume at 1250 fpm Free Area Velocity	9,488 cfm (4477 l/s)
	Pressure Drop @ 1000 fpm	.22 in. w.g. (55 Pa)

NOTE: To minimize water penetration when sizing intake louvers, select a Free Area Velocity that is **below** the point of beginning water penetration.*Maximum Free Area Velocity tested is 1250 fpm. Beginning point of water penetration for this model is above 1250 fpm.

WIND DRIVEN RAIN PERFORMANCE

Core Ventilation Rate in fpm (m/s)	0 (0.0)	110 (0.56)	195 (0.99)	279 (1.42)	396 (2.01)	499 (2.53)	585 (2.97)	700 (3.56)	783 (3.98)	884 (4.49)	981 (4.98)
Free Area Ventilation Rate in fpm (m/s)	0 (0.0)	216 (1.10)	382 (1.94)	547 (2.78)	776 (3.94)	978 (4.97)	1147 (5.83)	1372 (6.97)	1535 (7.80)	1733 (8.80)	1923 (9.77)
Effectiveness Ratio (%)	100	100	100	100	100	99.6	99.5	99	97.3	94	91.4
Penetration Class	A	A	A	A	A	A	A	A	B	C	C

Test was based on a 39.375" x 39.375" (1.0 m x 1.0 m) core area louver tested at a rainfall rate of 3" per hour (76 mm/hour) with a wind velocity of **29 mph (13 m/s).**
DISCHARGE LOSS COEFFICIENT CLASS (INTAKE): 3. (Discharge Loss Coefficient Classification is as follows: 1=0.4 and above, 2=0.3 to 0.399, 3 = 0.2 to 0.299, 4 = 0.199 and below.)

Core Ventilation Rate in fpm (m/s)	0 (0.0)	91 (0.46)	198 (1.01)	298 (1.51)	410 (2.08)	487 (2.47)	593 (3.01)	686 (3.48)	785 (3.99)	887 (4.51)	992 (5.04)
Free Area Ventilation Rate in fpm (m/s)	0 (0.0)	178 (0.90)	388 (1.97)	584 (2.97)	804 (4.08)	955 (4.85)	1162 (5.90)	1345 (6.83)	1539 (7.82)	1739 (8.94)	1944 (9.88)
Effectiveness Ratio (%)	100	99.6	99.3	99.2	98.6	98.1	97.7	96.4	93.4	89.8	85.5
Penetration Class	A	A	A	A	B	B	B	B	C	C	C

Test was based on a 39.375" x 39.375" (1.0 m x 1.0 m) core area louver tested at a rainfall rate of 8" per hour (203 mm/hour) with a wind velocity of **50 mph (22 m/s).**
DISCHARGE LOSS COEFFICIENT CLASS (INTAKE): 3. (Discharge Loss Coefficient Classification is as follows: 1=0.4 and above, 2=0.3 to 0.399, 3 = 0.2 to 0.299, 4 = 0.199 and below.)

PRESSURE DROP

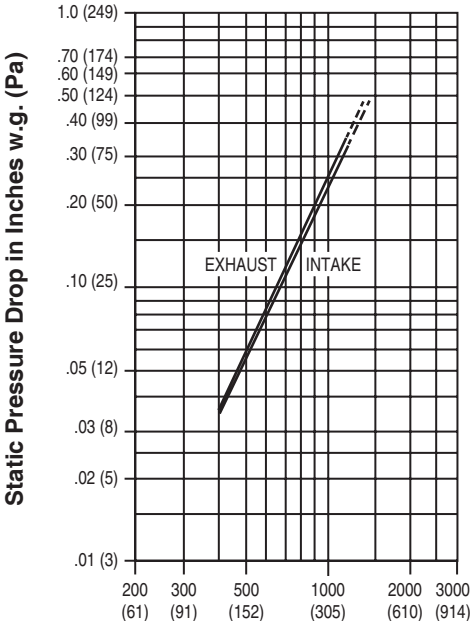

Air Velocity in Feet (Meters) Per Minute Through Free Area

Louver test size: 48" x 48" (1219 x 1219 mm).
Standard air density @ 0.075 lbs/ft³.
Tested to AMCA Fig. 5.5 – 6.5.

amca WORLDWIDE CERTIFIED RATINGS — WATER PENETRATION, AIR PERFORMANCE, WIND DRIVEN RAIN — AIR MOVEMENT AND CONTROL ASSOCIATION INTERNATIONAL, INC. www.amca.org

Nailor Industries Inc. certifies that the Model 1605WD shown herein is licensed to bear the AMCA Certified Ratings Program seal. The ratings shown are based on tests and procedures performed in accordance with AMCA Publication 511 and comply with the requirements of the AMCA Certified Ratings Program. The AMCA Certified Ratings Program seal applies to Water Penetration, Wind Driven Rain, and Air Performance ratings.

Louvers were tested in accordance with AMCA Standard 500-L.

amca INTERNATIONAL

SCHEDULE TYPE:	Page 3 of 3 Dimensions are in inches (mm).			
PROJECT:				
ENGINEER:	**DATE**	**B SERIES**	**SUPERSEDES**	**DRAWING NO.**
CONTRACTOR:	**5 - 28 - 25**	**1600**	**1 - 30 - 24**	**1605WD**

Nailor Industries Inc. reserves the right to change any information concerning product or pricing without notice.

Nailor® Industries Inc.

EXTRUDED ALUMINUM STATIONARY LOUVER
FLORIDA PRODUCT APPROVED
WIND-DRIVEN RAIN RESISTANT
5" (127) DEEP • HORIZONTAL BLADE
MODEL: 1605WDF

Intertek

QUALIFICATIONS:
- **Florida Product Approval No. : 19273.2**
- **Intertek Listed Building Product: Exterior Louvers.**
- **Tested in accordance with: TAS-201 (Large Missile Impact Test), TAS-202 (Uniform Static Air Pressure Test), TAS-203 (Cyclic Wind Pressure Loading Test).**
- **AMCA 500-L (Wind-Driven Rain, Water Penetration, Airflow).**
- **AMCA 540 (Wind-Borne Debris Impact Test [Enhanced "Level E" Protection]).**
- **AMCA 550 (High Velocity Wind-Driven Rain Resistance Test [with optional Model 2020 damper in closed position]).**
- **Wind load rating +/– 50 PSF (standard) (up to +/– 150 PSF dependent on size and configuration).**

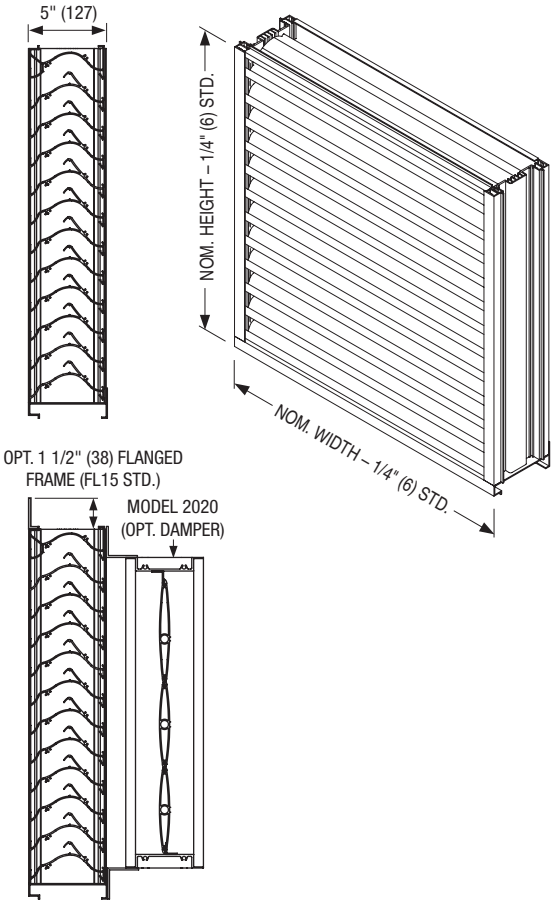

STANDARD CONSTRUCTION:

FRAME:	5" (127) deep, Type 6063-T6 extruded aluminum, .080" (2.03) nominal wall thickness. Integral downspouts and caulking slot provided.
BLADES:	Type 6063-T6 extruded aluminum, .080" (2.03) nominal wall thickness, with reinforcing bosses.
BLADE ANGLE:	Fixed at 30 degrees.
BLADE SPACING:	1.86" (47) on centers.
BLADE SUPPORT:	Concealed type, factory installed on rear of louver. Size varies based on design pressure, consult Nailor.
SCREEN:	5/8" x .050 (15.9 x 1.27) expanded, flattened aluminum bird screen in removable frame, inside (rear) mount (adds approx. 3/8" [10] to louver depth).
FINISH:	Mill.
MINIMUM SIZE:	12" W x 12" H (305 x 305).
MAX. SINGLE SECTION SIZE:	108" W x 84" H (2743 x 2134) or 84" W x 120" H (2134 x 3048). 63 – 70 sq. ft. (5.9 – 6.5 m^2). Larger louvers will require field assembly of smaller sections.

OVERALL MAXIMUM SIZE: Unlimited Width x 120" H (3048).

OPTIONS:
- ❑ **FL15** Flanged Frame, 1 1/2" (38).
- ❑ **FL20** Flanged Frame, 2" (51).
- ❑ **BSSS** Type 304 S.S. Bird Screen.
- ❑ **BSN** No Bird Screen.
- ❑ **ISA** Aluminum Insect Screen.
- ❑ **ISSS** Type 304 S.S. Insect Screen.
- ❑ **ESI** Extended Sill.
- ❑ **PASI** Sill Pan.
- ❑ Other: _____ .

OPTIONAL FINISHES:
- ❑ **PC3** Powder Coat AAMA 2603. Color: _____ .
- ❑ **PC4** High Performance Powder Coat AAMA 2604 (Equivalent to 50% Kynar®). Color: _____ .
- ❑ **PC5** Fluoropolymer Powder Coat AAMA 2605 (Equivalent to 70% Kynar®). Color: _____ .
- ❑ **PCC** Prime Coat.
- ❑ **AN04** Clear Anodized 204-R1.
- ❑ **AN15** Clear Anodized 215-R1.
- ❑ **ANLB** Light Bronze.
- ❑ **ANMB** Medium Bronze.
- ❑ **ANDB** Dark Bronze.
- ❑ **ANBK** Black.

OPT. FACTORY MOUNTED 2020 CONTROL DAMPER:
- Extruded Aluminum
- Opposed Airfoil Blades
- Concealed Linkage
- Silicone Blade Seal
- Cambered Stainless Steel Jamb Seals
- 1/2" (13) Plated Steel Axles

For Installation Instructions, see IOM-LOUVERINSTFPA.

Dimensions are in inches (mm).

SCHEDULE TYPE:				
PROJECT:				
ENGINEER:	**DATE**	**B SERIES**	**SUPERSEDES**	**DRAWING NO.**
CONTRACTOR:	**11 - 22 - 24**	**1600F**	**1 - 30 - 24**	**1605WDF**

Nailor Industries Inc. reserves the right to change any information concerning product or pricing without notice.

Nailor® Industries Inc.

EXTRUDED ALUMINUM STATIONARY LOUVER
FLORIDA PRODUCT APPROVED
WIND-DRIVEN RAIN RESISTANT • 5" (127) DEEP
HORIZONTAL BLADE • PERFORMANCE DATA
MODEL: 1605WDF

Intertek

FREE AREA in Square Feet and Square Meters

Height in Inches and Meters	Width in Inches and Meters																
	12 0.30	18 0.46	24 0.61	30 0.76	36 0.91	42 1.07	48 1.22	54 1.37	60 1.52	66 1.68	72 1.83	78 1.98	84 2.13	90 2.29	96 2.44	102 2.59	108 2.74
12 0.30	0.27 0.03	0.43 0.04	0.60 0.06	0.76 0.07	0.93 0.09	1.09 0.10	1.26 0.12	1.42 0.13	1.59 0.15	1.75 0.16	1.92 0.18	2.08 0.19	2.25 0.21	2.41 0.22	2.58 0.24	2.74 0.25	2.91 0.27
18 0.46	0.47 0.04	0.76 0.07	1.05 0.10	1.34 0.12	1.63 0.15	1.92 0.18	2.20 0.20	2.49 0.23	2.78 0.26	3.07 0.29	3.36 0.31	3.65 0.34	3.94 0.37	4.23 0.39	4.51 0.42	4.80 0.45	5.09 0.47
24 0.61	0.74 0.07	1.19 0.11	1.65 0.15	2.10 0.20	2.56 0.24	3.01 0.28	3.46 0.32	3.92 0.36	4.37 0.41	4.82 0.45	5.28 0.49	5.73 0.53	6.19 0.57	6.64 0.62	7.09 0.66	7.55 0.70	8.00 0.74
30 0.76	0.94 0.09	1.52 0.14	2.10 0.19	2.68 0.25	3.25 0.30	3.83 0.36	4.41 0.41	4.99 0.46	5.56 0.52	6.14 0.57	6.72 0.62	7.30 0.68	7.87 0.73	8.45 0.79	9.03 0.84	9.61 0.89	10.18 0.95
36 0.36	1.15 0.11	1.85 0.17	2.55 0.24	3.25 0.30	3.95 0.37	4.65 0.43	5.35 0.50	6.05 0.56	6.76 0.63	7.46 0.69	8.16 0.76	8.86 0.82	9.56 0.89	10.26 0.95	10.96 1.02	11.66 1.08	12.37 1.15
42 1.07	1.35 0.13	2.17 0.20	3.00 0.28	3.82 0.36	4.65 0.43	5.47 0.51	6.30 0.59	7.12 0.66	7.95 0.74	8.77 0.81	9.60 0.89	10.42 0.97	11.25 1.04	12.07 1.12	12.90 1.20	13.72 1.27	14.55 1.35
48 1.22	1.62 0.15	2.61 0.24	3.60 0.33	4.59 0.43	5.58 0.52	6.57 0.61	7.59 0.71	8.55 0.79	9.54 0.89	10.53 0.98	11.52 1.07	12.51 1.16	13.5 1.25	14.49 1.35	15.48 1.44	16.47 1.53	17.46 1.62
54 1.37	1.82 0.17	2.93 0.27	4.05 0.38	5.16 0.48	6.27 0.58	7.39 0.69	8.50 0.79	9.62 0.89	10.73 1.00	11.84 1.10	12.96 1.20	14.07 1.31	15.18 1.41	16.30 1.51	17.41 1.62	18.53 1.72	19.64 1.82
60 1.52	2.02 0.19	3.26 0.30	4.50 0.42	5.73 0.53	6.97 0.65	8.21 0.76	9.45 0.88	10.68 0.99	11.92 1.11	13.16 1.22	14.40 1.34	15.63 1.45	16.87 1.57	18.11 1.68	19.35 1.80	20.58 1.91	21.82 2.03
66 1.68	2.22 0.21	3.58 0.33	4.95 0.46	6.31 0.59	7.67 0.71	9.03 0.84	10.39 0.97	11.75 1.09	13.11 1.22	14.47 1.34	15.84 1.47	17.2 1.60	18.56 1.72	19.92 1.85	21.28 1.98	22.64 2.10	24.00 2.23
72 1.83	2.49 0.23	4.02 0.37	5.55 0.52	7.07 0.66	8.60 0.80	10.12 0.94	11.65 1.08	13.18 1.22	14.70 1.37	16.23 1.51	17.76 1.65	19.28 1.79	20.81 1.93	22.33 2.07	23.86 2.22	25.39 2.36	26.91 2.50
78 1.98	2.7 0.25	4.35 0.40	6.00 0.56	7.65 0.71	9.30 0.86	10.95 1.02	12.6 1.17	14.25 1.32	15.90 1.48	17.55 1.63	19.20 1.78	20.85 1.94	22.5 2.09	24.15 2.24	25.80 2.40	27.45 2.55	29.10 2.70
84 2.13	2.9 0.27	4.67 0.43	6.44 0.60	8.22 0.76	9.99 0.93	11.77 1.09	13.54 1.26	15.31 1.42	17.09 1.59	18.86 1.75	20.63 1.92	22.41 2.08	24.18 2.25	25.96 2.41	27.73 2.58	29.5 2.74	31.28 2.91
90 2.29	3.10 0.29	5.00 0.46	6.89 0.64	8.79 0.82	10.69 0.99	12.59 1.17	14.48 1.35	16.38 1.52	18.28 1.70	20.18 1.87	22.07 2.05	23.97 2.23	25.87 2.40				
96 2.44	3.30 0.31	5.32 0.49	7.34 0.68	9.37 0.87	11.39 1.06	13.41 1.25	15.43 1.43	17.45 1.62	19.47 1.81	21.49 2.00	23.51 2.18	25.54 2.37	27.56 2.56				
102 2.59	3.57 0.33	5.76 0.53	7.94 0.74	10.13 0.94	12.32 1.14	14.50 1.35	16.69 1.55	18.87 1.75	21.06 1.96	23.25 2.16	25.43 2.36	27.62 2.57	29.81 2.77				
108 2.74	3.77 0.35	6.08 0.57	8.39 0.78	10.70 0.99	13.01 1.21	15.32 1.42	17.63 1.64	19.94 1.85	22.25 2.07	24.56 2.28	26.87 2.50	29.18 2.71	31.49 2.93				
114 2.90	3.98 0.37	6.41 0.60	8.84 0.82	11.28 1.05	13.71 1.27	16.14 1.50	18.58 1.73	21.01 1.95	23.45 2.18	25.88 2.40	28.31 2.63	30.75 2.86	33.18 3.08				
120 3.05	4.18 0.39	6.73 0.63	9.29 0.86	11.85 1.10	14.41 1.34	16.96 1.58	19.52 1.81	22.08 2.05	24.64 2.29	27.19 2.53	29.75 2.76	32.31 3.00	34.87 3.24				

SCHEDULE TYPE:	Page 2 of 3 Dimensions are in inches (mm).			
PROJECT:				
ENGINEER:	**DATE**	**B SERIES**	**SUPERSEDES**	**DRAWING NO.**
CONTRACTOR:	**11 - 22 - 24**	**1600F**	**1 - 30 - 24**	**1605WDF**

Nailor Industries Inc. reserves the right to change any information concerning product or pricing without notice.

Nailor® Industries Inc.

EXTRUDED ALUMINUM STATIONARY LOUVER
FLORIDA PRODUCT APPROVED
WIND-DRIVEN RAIN RESISTANT • 5" (127) DEEP HORIZONTAL BLADE • PERFORMANCE DATA
MODEL: 1605WDF

Intertek

AIRFLOW/WATER PENETRATION DATA
for 48" x 48" (1219 x 1219) Louver Size

	Free Area %	47%
	Free Area sq. ft. (sq. m.)	7.59 (0.71)
INTAKE	Free Area Velocity at Point of Beginning Water Penetration at .01 oz./sq. ft. (3 ml/sq. m) (15 min. test duration)	1250 fpm (381 m/min.)*
INTAKE	Air Volume at 1250 fpm Free Area Velocity	9,488 cfm (4477 l/s)
INTAKE	Pressure Drop @ 1000 fpm	.22 in. w.g. (55 Pa)

NOTE: To minimize water penetration when sizing intake louvers, select a Free Area Velocity that is **below** the beginning point of water penetration.*Maximum Free Area Velocity tested is 1250 fpm. Beginning point of water penetration for this model is above 1250 fpm.

WIND DRIVEN RAIN PERFORMANCE

Core Ventilation	0	110	195	279	396	499	585	700	783	884	981
Rate in fpm (m/s)	(0.0)	(0.56)	(0.99)	(1.42)	(2.01)	(2.53)	(2.97)	(3.56)	(3.98)	(4.49)	(4.98)
Free Area Ventilation	0	216	382	547	776	978	1147	1372	1535	1733	1923
Rate in fpm (m/s)	(0.0)	(1.10)	(1.94)	(2.78)	(3.94)	(4.97)	(5.83)	(6.97)	(7.80)	(8.80)	(9.77)
Effectiveness Ratio (%)	100	100	100	100	100	99.6	99.5	99	97.3	94	91.4
Penetration Class	A	A	A	A	A	A	A	A	B	C	C

Test was based on a 39.375" x 39.375" (1.0 m x 1.0 m) core area louver tested at a rainfall rate of 3" per hour (76 mm/hour) with a wind velocity of **29 mph (13 m/s).**
DISCHARGE LOSS COEFFICIENT CLASS (INTAKE): 3. (Discharge Loss Coefficient Classification is as follows: 1=0.4 and above, 2=0.3 to 0.399, 3 = 0.2 to 0.299, 4 = 0.199 and below.)

Core Ventilation	0	91	198	298	410	487	593	686	785	887	992
Rate in fpm (m/s)	(0.0)	(0.46)	(1.01)	(1.51)	(2.08)	(2.47)	(3.01)	(3.48)	(3.99)	(4.51)	(5.04)
Free Area Ventilation	0	178	388	584	804	955	1162	1345	1539	1739	1944
Rate in fpm (m/s)	(0.0)	(0.90)	(1.97)	(2.97)	(4.08)	(4.85)	(5.90)	(6.83)	(7.82)	(8.94)	(9.88)
Effectiveness Ratio (%)	100	99.6	99.3	99.2	98.6	98.1	97.7	96.4	93.4	89.8	85.5
Penetration Class	A	A	A	A	B	B	B	B	C	C	C

Test was based on a 39.375" x 39.375" (1.0 m x 1.0 m) core area louver tested at a rainfall rate of 8" per hour (203 mm/hour) with a wind velocity of **50 mph (22 m/s).**
DISCHARGE LOSS COEFFICIENT CLASS (INTAKE): 3. (Discharge Loss Coefficient Classification is as follows: 1=0.4 and above, 2=0.3 to 0.399, 3 = 0.2 to 0.299, 4 = 0.199 and below.)

PRESSURE DROP

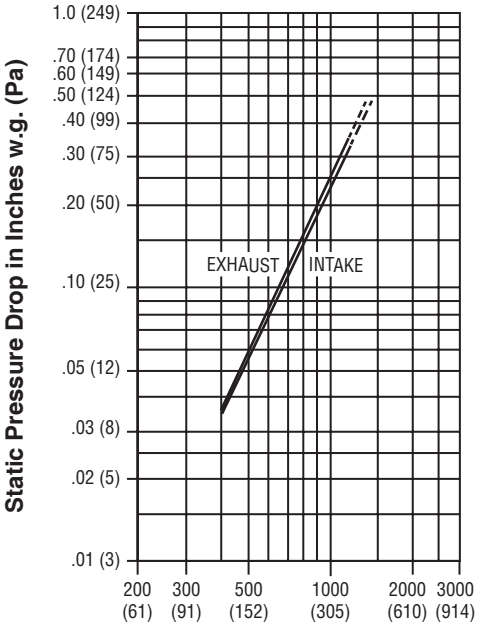

Air Velocity in Feet (Meters) Per Minute Through Free Area

Louver test size: 48" x 48" (1219 x 1219 mm).
Standard air density @ 0.075 lbs/ft³.
Tested to AMCA Fig. 5.5 – 6.5.

amca WORLDWIDE CERTIFIED RATINGS — WATER PENETRATION, AIR PERFORMANCE, WIND DRIVEN RAIN — AIR MOVEMENT AND CONTROL ASSOCIATION INTERNATIONAL, INC. www.amca.org

Nailor Industries Inc. certifies that the Model 1605WDVF shown herein is licensed to bear the AMCA Certified Ratings Program seal. The ratings shown are based on tests and procedures performed in accordance with AMCA Publication 511 and comply with the requirements of the AMCA Certified Ratings Program. The AMCA Certified Ratings Program Seal applies to Air Performance, Water Penetration, and Wind-Driven Rain performance ratings.

Louvers were tested in accordance with AMCA Standard 500-L.

amca INTERNATIONAL LISTED — HIGH VELOCITY RAIN RESISTANT WITH BLADES FULLY CLOSED AND IMPACT RESISTANT LOUVER *Enhanced Protection Level E* — *See www.AMCA.org for all certified or listed products* — This label does not signify AMCA airflow performance certification.

Nailor Industries Inc. certifies that the 1605WDVF shown herein is approved to bear the AMCA International Listing Label. The ratings shown are based on tests and procedures performed in accordance with AMCA publications and comply with the requirements of the AMCA International Listing Label program. The AMCA International Listing Label applies to pressure cycle tested wind-borne debris impact resistant louvers rated for "Enhanced Protection" and +/- 50PSF with a minimum blade span of less than 12 in. (305mm) and a maximum unsupported blade span of 52 in. (1321 mm) and to High Velocity Wind-Driven Rain Resistant Louvers tested in the fully open position that permits airflow through a louver.

SCHEDULE TYPE:
PROJECT:
ENGINEER:
CONTRACTOR:

Dimensions are in inches (mm).

DATE	B SERIES	SUPERSEDES	DRAWING NO.
11 - 22 - 24	1600F	1 - 30 - 24	1605WDF

Nailor Industries Inc. reserves the right to change any information concerning product or pricing without notice.

Nailor® Industries Inc.

EXTRUDED ALUMINUM STATIONARY LOUVER
MIAMI-DADE QUALIFIED • FLORIDA PRODUCT APPROVED
WIND-DRIVEN RAIN RESISTANT
5" (127) DEEP • HORIZONTAL BLADE
MODEL: 1605WDM

QUALIFICATIONS:

- **Miami-Dade County NOA No. : 26-0518.08**
- **Florida Product Approval No. 41441.1**
- **Texas Department of Insurance Evaluation ID: LVR-28**
- **Tested in accordance with: TAS-201 (Large Missile Impact Test), TAS-202 (Uniform Static Air Pressure Test), TAS-203 (Cyclic Wind Pressure Loading Test), TAS-100A (Wind-Driven Rain Test [with optional Model 2020 damper in closed position]).**
- **AMCA 500-L (Wind-Driven Rain, Water Penetration, Air Performance).**
- **AMCA 540 (Wind-Borne Debris Impact Test [Enhanced "Level E" Protection]).**
- **AMCA 550 (High Velocity Wind-Driven Rain Resistance Test [with optional Model 2020 damper in closed position]).**
- **Wind load rating +/– 150 PSF.**

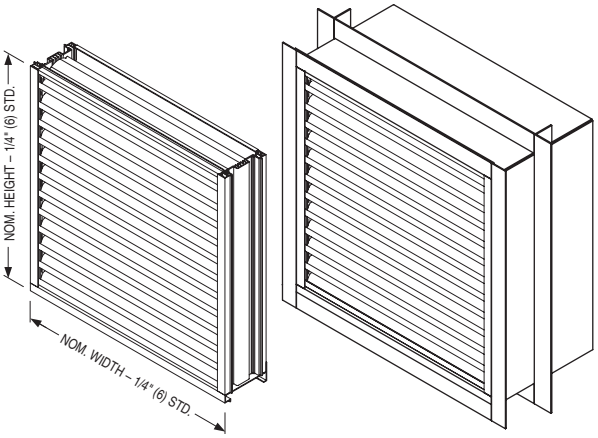

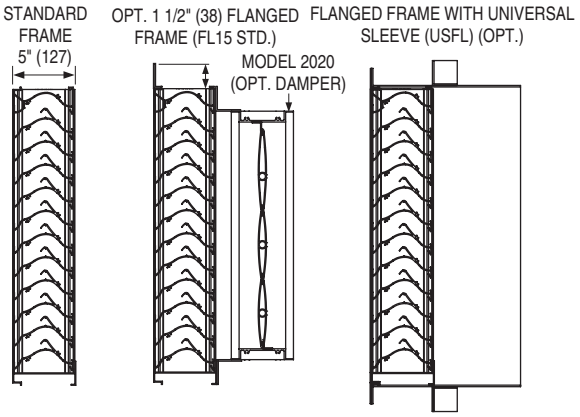

STANDARD CONSTRUCTION:

FRAME:	5" (127) deep, Type 6063-T6 extruded aluminum, .080" (2.03) nominal wall thickness. Integral downspouts and caulking slot provided.
BLADES:	Type 6063-T6 extruded aluminum, .080" (2.03) nominal wall thickness, with reinforcing bosses.
BLADE ANGLE:	Fixed at 30 degrees.
BLADE SPACING:	1.86" (47) on centers.
BLADE SUPPORT:	Concealed type, factory installed on rear of louver. Reinforced with 2" x 2" (51 x 51) angle (adds approximately 2" [51] to overall louver depth).
SCREEN:	3/4" x .050 (19 x 1.27) expanded, flattened aluminum bird screen in removable frame, inside (rear) mount (adds approx. 3/8" [10] to louver depth).
FINISH:	Mill.
MINIMUM SIZE:	12" W x 12" H (305 x 305).
MAX. SINGLE	72" W x 120" H (1829 x 3048). 60 sq. ft. (5.6 m^2)
SECTION SIZE:	(36" W x 120" H [914 x 3048] with optional Model 2020 damper). Larger louvers will require field assembly of smaller sections.
MAXIMUM SIZE:	Unlimited Width x 120" H (3048).

OPTIONS:

- ❑ **FL15** Flanged Frame, 1 1/2" (38).
- ❑ **FL20** Flanged Frame, 2" (51).
- ❑ **USFL** Universal Sleeve/Flanged Frame.
- ❑ **BSSS** Type 304 S.S. Bird Screen.
- ❑ **BSN** No Bird Screen.
- ❑ **ISA** Aluminum Insect Screen.
- ❑ **ISSS** Type 304 S.S. Insect Screen.
- ❑ **ESI** Extended Sill.
- ❑ **PASI** Sill Pan.
- ❑ Other: _____ .

OPTIONAL FINISHES:

- ❑ **PC3** Powder Coat AAMA 2603. Color: _____ .
- ❑ **PC4** High Performance Powder Coat AAMA 2604 (Equivalent to 50% Kynar®). Color: _____ .
- ❑ **PC5** Fluoropolymer Powder Coat AAMA 2605 (Equivalent to 70% Kynar®). Color: _____ .
- ❑ **PCC** Prime Coat.
- ❑ **AN04** Clear Anodized 204-R1.
- ❑ **AN15** Clear Anodized 215-R1.
- ❑ **ANLB** Light Bronze.
- ❑ **ANMB** Medium Bronze.
- ❑ **ANDB** Dark Bronze.
- ❑ **ANBK** Black.

OPT. FACTORY MOUNTED 2020 CONTROL DAMPER:

- Extruded Aluminum
- Opposed Airfoil Blades
- Concealed Linkage
- Silicone Blade Seal
- Cambered Stainless Steel Jamb Seals
- 1/2" (13) Plated Steel Axles

SCHEDULE TYPE:

PROJECT:

ENGINEER:

CONTRACTOR:

For Installation Instructions, see approved NOA.
Page 1 of 3 Dimensions are in inches (mm).

DATE	B SERIES	SUPERSEDES	DRAWING NO.
6 - 29 - 26	1600M	3 - 27 - 26	1605WDM

Nailor Industries Inc. reserves the right to change any information concerning product or pricing without notice.

Nailor® Industries Inc.

EXTRUDED ALUMINUM STATIONARY LOUVER
MIAMI-DADE QUALIFIED • FLORIDA PRODUCT APPROVED
WIND-DRIVEN RAIN RESISTANT
5" (127) DEEP • HORIZONTAL BLADE • PERFORMANCE DATA
MODEL: 1605WDM

FREE AREA in Square Feet and Square Meters

Height in Inches and Meters	Width in Inches and Meters										
	12 0.30	18 0.46	24 0.61	30 0.76	36 0.91	42 1.07	48 1.22	54 1.37	60 1.52	66 1.68	72 1.83
12 0.30	0.27 0.03	0.43 0.04	0.60 0.06	0.76 0.07	0.93 0.09	1.09 0.10	1.26 0.12	1.42 0.13	1.59 0.15	1.75 0.16	1.92 0.18
18 0.46	0.47 0.04	0.76 0.07	1.05 0.10	1.34 0.12	1.63 0.15	1.92 0.18	2.20 0.20	2.49 0.23	2.78 0.26	3.07 0.29	3.36 0.31
24 0.61	0.74 0.07	1.19 0.11	1.65 0.15	2.10 0.20	2.56 0.24	3.01 0.28	3.46 0.32	3.92 0.36	4.37 0.41	4.82 0.45	5.28 0.49
30 0.76	0.94 0.09	1.52 0.14	2.10 0.19	2.68 0.25	3.25 0.30	3.83 0.36	4.41 0.41	4.99 0.46	5.56 0.52	6.14 0.57	6.72 0.62
36 0.36	1.15 0.11	1.85 0.17	2.55 0.24	3.25 0.30	3.95 0.37	4.65 0.43	5.35 0.50	6.05 0.56	6.76 0.63	7.46 0.69	8.16 0.76
42 1.07	1.35 0.13	2.17 0.20	3.00 0.28	3.82 0.36	4.65 0.43	5.47 0.51	6.30 0.59	7.12 0.66	7.95 0.74	8.77 0.81	9.60 0.89
48 1.22	1.62 0.15	2.61 0.24	3.60 0.33	4.59 0.43	5.58 0.52	6.57 0.61	7.59 0.71	8.55 0.79	9.54 0.89	10.53 0.98	11.52 1.07
54 1.37	1.82 0.17	2.93 0.27	4.05 0.38	5.16 0.48	6.27 0.58	7.39 0.69	8.50 0.79	9.62 0.89	10.73 1.00	11.84 1.10	12.96 1.20
60 1.52	2.02 0.19	3.26 0.30	4.50 0.42	5.73 0.53	6.97 0.65	8.21 0.76	9.45 0.88	10.68 0.99	11.92 1.11	13.16 1.22	14.40 1.34
66 1.68	2.22 0.21	3.58 0.33	4.95 0.46	6.31 0.59	7.67 0.71	9.03 0.84	10.39 0.97	11.75 1.09	13.11 1.22	14.47 1.34	15.84 1.47
72 1.83	2.49 0.23	4.02 0.37	5.55 0.52	7.07 0.66	8.60 0.80	10.12 0.94	11.65 1.08	13.18 1.22	14.70 1.37	16.23 1.51	17.76 1.65
78 1.98	2.7 0.25	4.35 0.40	6.00 0.56	7.65 0.71	9.30 0.86	10.95 1.02	12.6 1.17	14.25 1.32	15.90 1.48	17.55 1.63	19.20 1.78
84 2.13	2.9 0.27	4.67 0.43	6.44 0.60	8.22 0.76	9.99 0.93	11.77 1.09	13.54 1.26	15.31 1.42	17.09 1.59	18.86 1.75	20.63 1.92
90 2.29	3.10 0.29	5.00 0.46	6.89 0.64	8.79 0.82	10.69 0.99	12.59 1.17	14.48 1.35	16.38 1.52	18.28 1.70	20.18 1.87	22.07 2.05
96 2.44	3.30 0.31	5.32 0.49	7.34 0.68	9.37 0.87	11.39 1.06	13.41 1.25	15.43 1.43	17.45 1.62	19.47 1.81	21.49 2.00	23.51 2.18
102 2.59	3.57 0.33	5.76 0.53	7.94 0.74	10.13 0.94	12.32 1.14	14.50 1.35	16.69 1.55	18.87 1.75	21.06 1.96	23.25 2.16	25.43 2.36
108 2.74	3.77 0.35	6.08 0.57	8.39 0.78	10.70 0.99	13.01 1.21	15.32 1.42	17.63 1.64	19.94 1.85	22.25 2.07	24.56 2.28	26.87 2.50
114 2.90	3.98 0.37	6.41 0.60	8.84 0.82	11.28 1.05	13.71 1.27	16.14 1.50	18.58 1.73	21.01 1.95	23.45 2.18	25.88 2.40	28.31 2.63
120 3.05	4.18 0.39	6.73 0.63	9.29 0.86	11.85 1.10	14.41 1.34	16.96 1.58	19.52 1.81	22.08 2.05	24.64 2.29	27.19 2.53	29.75 2.76

SCHEDULE TYPE:	Page 2 of 3 Dimensions are in inches (mm).			
PROJECT:				
ENGINEER:	**DATE**	**B SERIES**	**SUPERSEDES**	**DRAWING NO.**
CONTRACTOR:	**6 - 29 - 26**	**1600M**	**3 - 27 - 26**	**1605WDM**

Nailor Industries Inc. reserves the right to change any information concerning product or pricing without notice.

Nailor® Industries Inc.

EXTRUDED ALUMINUM STATIONARY LOUVER
MIAMI-DADE QUALIFIED • FLORIDA PRODUCT APPROVED
WIND-DRIVEN RAIN RESISTANT
5" (127) DEEP • HORIZONTAL BLADE • PERFORMANCE DATA
MODEL: 1605WDM

AIRFLOW / WATER PENETRATION DATA
for 48" x 48" (1219 x 1219) Louver Size

	Free Area %	47%
	Free Area sq. ft. (sq. m.)	7.59 (0.71)
INTAKE	Free Area Velocity at Point of Beginning Water Penetration at .01 oz./sq. ft. (3 ml/sq. m) (15 min. test duration)	1250 fpm (381 m/min.)*
INTAKE	Air Volume at 1250 fpm Free Area Velocity	9,488 cfm (4478 l/s)
INTAKE	Pressure Drop @ 1250 fpm	.36 in. w.g. (90 Pa)

NOTE: To minimize water penetration when sizing intake louvers, select a Free Area Velocity that is **below** the beginning point of water penetration.*Maximum Free Area Velocity tested is 1250 fpm. Beginning point of water penetration for this model is above 1250 fpm.

WIND DRIVEN RAIN PERFORMANCE

Core Ventilation Rate in fpm (m/s)	0 (0.0)	110 (0.56)	195 (0.99)	279 (1.42)	396 (2.01)	499 (2.53)	585 (2.97)	700 (3.56)	783 (3.98)	884 (4.49)	981 (4.98)
Free Area Ventilation Rate in fpm (m/s)	0 (0.0)	216 (1.10)	382 (1.94)	547 (2.78)	776 (3.94)	978 (4.97)	1147 (5.83)	1372 (6.97)	1535 (7.80)	1733 (8.80)	1923 (9.77)
Effectiveness Ratio (%)	100	100	100	100	100	99.6	99.5	99	97.3	94	91.4
Penetration Class	A	A	A	A	A	A	A	A	B	C	C

Test was based on a 39.375" x 39.375" (1.0 m x 1.0 m) core area louver tested at a rainfall rate of 3" per hour (76 mm/hour) with a wind velocity of **29 mph (13 m/s).**
DISCHARGE LOSS COEFFICIENT CLASS (INTAKE): 3. (Discharge Loss Coefficient Classification is as follows: 1=0.4 and above, 2=0.3 to 0.399, 3 = 0.2 to 0.299, 4 = 0.199 and below.)

Core Ventilation Rate in fpm (m/s)	0 (0.0)	91 (0.46)	198 (1.01)	298 (1.51)	410 (2.08)	487 (2.47)	593 (3.01)	686 (3.48)	785 (3.99)	887 (4.51)	992 (5.04)
Free Area Ventilation Rate in fpm (m/s)	0 (0.0)	178 (0.90)	388 (1.97)	584 (2.97)	804 (4.08)	955 (4.85)	1162 (5.90)	1345 (6.83)	1539 (7.82)	1739 (8.94)	1944 (9.88)
Effectiveness Ratio (%)	100	99.6	99.3	99.2	98.6	98.1	97.7	96.4	93.4	89.8	85.5
Penetration Class	A	A	A	A	B	B	B	B	C	C	C

Test was based on a 39.375" x 39.375" (1.0 m x 1.0 m) core area louver tested at a rainfall rate of 8" per hour (203 mm/hour) with a wind velocity of **50 mph (22 m/s).**
DISCHARGE LOSS COEFFICIENT CLASS (INTAKE): 3. (Discharge Loss Coefficient Classification is as follows: 1=0.4 and above, 2=0.3 to 0.399, 3 = 0.2 to 0.299, 4 = 0.199 and below.)

PRESSURE DROP

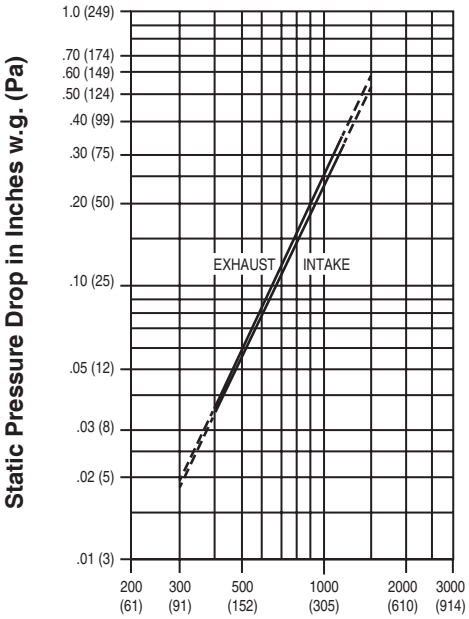

Air Velocity in Feet (Meters) Per Minute Through Free Area

Louver test size: 48" x 48" (1219 x 1219 mm).
Standard air density @ 0.075 lbs/ft³.
Tested to AMCA Fig. 5.5 – 6.5.

amca WORLDWIDE CERTIFIED RATINGS — WATER PENETRATION, AIR PERFORMANCE, WIND DRIVEN RAIN — AIR MOVEMENT AND CONTROL ASSOCIATION INTERNATIONAL, INC. www.amca.org

Nailor Industries Inc. certifies that the Model 1605WDM shown herein is licensed to bear the AMCA Certified Ratings Program seal. The ratings shown are based on tests and procedures performed in accordance with AMCA Publication 511 and comply with the requirements of the AMCA Certified Ratings Program. The AMCA Certified Ratings Program seal applies to Water Penetration, Wind Driven Rain, and Air Performance ratings.

Louvers were tested in accordance with AMCA Standard 500-L.

amca INTERNATIONAL LISTED — HIGH VELOCITY RAIN RESISTANT WITH BLADES FULLY CLOSED AND IMPACT RESISTANT LOUVER *Enhanced Protection Level E* — *See www.AMCA.org for all certified or listed products* — This label does not signify AMCA airflow performance certification.

Nailor Industries Inc. certifies that the 1605WDM louver shown herein is approved to bear the AMCA International Listing Label. The ratings shown are based on tests and procedures performed in accordance with AMCA publications and comply with the requirements of the AMCA International Listing Label program. The AMCA International Listing Label applies to pressure cycle tested wind-borne debris impact resistant louvers rated for Enhanced Protection and +/- 150PSF with a minimum blade span of less than 12 in. (305mm) and a maximum unsupported blade span of 34 in. (864mm). The AMCA International Listing Label applies to High Velocity Wind-Driven Rain Resistant Louvers tested in the fully closed position that stops airflow through a louver.

SCHEDULE TYPE:
PROJECT:
ENGINEER:
CONTRACTOR:

Dimensions are in inches (mm).

DATE	B SERIES	SUPERSEDES	DRAWING NO.
6 - 29 - 26	1600M	3 - 27 - 26	1605WDM

Nailor Industries Inc. reserves the right to change any information concerning product or pricing without notice.

EXTRUDED ALUMINUM STATIONARY LOUVER
HIGH VELOCITY WIND-DRIVEN RAIN AND IMPACT RESISTANT
5" (127) DEEP • VERTICAL BLADE
MODEL: 1605WDV

Nailor Industries Inc.

QUALIFICATIONS:

- **AMCA 500-L (Wind-Driven Rain, Water Penetration, Air Performance).**
- **AMCA 540 (Wind-Borne Debris Impact Test [Enhanced "Level E" Protection]).**
- **AMCA 550 (High Velocity Wind-Driven Rain Resistance Test).**
- **Wind load rating +/– 70 PSF.**

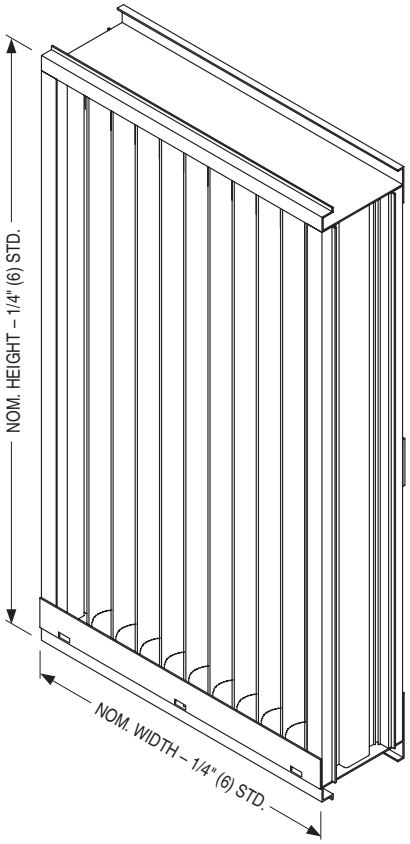

STANDARD CONSTRUCTION:

FRAME:	5" (127) deep, Type 6063-T6 extruded aluminum, .080" (2.03) nominal wall thickness. Integral downspouts and caulking slot provided.
BLADES:	Type 6063-T6 extruded aluminum, .070" (1.78) nominal wall thickness, with reinforcing bosses.
BLADE ANGLE:	Fixed at 45 degrees.
BLADE SPACING:	Approximately 1 1/2" (38) on centers.
BLADE SUPPORT:	2.5" (64) strap every 60" (1524) or less in height.
SCREEN:	3/4" x .050 (19 x 1.3) expanded, flattened aluminum bird screen in removable frame, inside (rear) mount (adds approximately 3/8" [10] to louver depth).
FINISH:	Mill.
MINIMUM SIZE:	12" W x 12" H (305 x 305).
MAX. SINGLE SECTION SIZE:	72" W x 120" H (1829 x 3048) or 120" W x 72" H (3048 x 1829). 60 sq. ft. (5.6 m²). Larger louvers will require field assembly of smaller sections.
MAXIMUM SIZE:	Unlimited Width x 120" H (3048).

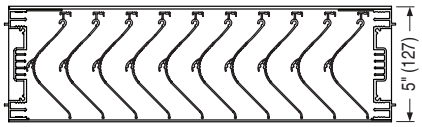

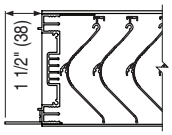

OPT. FLANGED FRAME
(FL15 STD.)

OPTIONS:

- ❑ **FL15** Flanged Frame, 1 1/2" (38).
- ❑ **FL20** Flanged Frame, 2" (51).
- ❑ **BSSS** Type 304 S.S. Bird Screen.
- ❑ **BSN** No Bird Screen.
- ❑ **ISA** Aluminum Insect Screen.
- ❑ **ISSS** Type 304 S.S. Insect Screen.
- ❑ **ESI** Extended Sill.
- ❑ **PASI** Sill Pan.
- ❑ Other: _____ .

amca WORLDWIDE CERTIFIED RATINGS — WATER PENETRATION, AIR PERFORMANCE, WIND DRIVEN RAIN — AIR MOVEMENT AND CONTROL ASSOCIATION INTERNATIONAL, INC. www.amca.org

amca INTERNATIONAL LISTED — HIGH VELOCITY RAIN RESISTANT WITH BLADES FULLY OPEN AND IMPACT RESISTANT LOUVER *Enhanced Protection Level E* — See www.AMCA.org for all certified or listed products — This label does not signify AMCA airflow performance certification.

OPTIONAL FINISHES:

- ❑ **PC3** Powder Coat AAMA 2603. Color: _____ .
- ❑ **PC4** High Performance Powder Coat AAMA 2604 (Equivalent to 50% Kynar®). Color: _____ .
- ❑ **PC5** Fluoropolymer Powder Coat AAMA 2605 (Equivalent to 70% Kynar®). Color: _____ .
- ❑ **PCC** Prime Coat.
- ❑ **AN04** Clear Anodized 204-R1.
- ❑ **AN15** Clear Anodized 215-R1.
- ❑ **ANLB** Light Bronze.
- ❑ **ANMB** Medium Bronze.
- ❑ **ANDB** Dark Bronze.
- ❑ **ANBK** Black.

SCHEDULE TYPE:	Page 1 of 3 Dimensions are in inches (mm).			
PROJECT:				
ENGINEER:	**DATE**	**B SERIES**	**SUPERSEDES**	**DRAWING NO.**
CONTRACTOR:	**5- 28 - 25**	**1600**	**1 - 30 - 24**	**1605WDV**

Nailor Industries Inc. reserves the right to change any information concerning product or pricing without notice.

Nailor® Industries Inc.

EXTRUDED ALUMINUM STATIONARY LOUVER
HIGH VELOCITY WIND-DRIVEN RAIN AND IMPACT RESISTANT
5" (127) DEEP • VERTICAL BLADE • PERFORMANCE DATA
MODEL: 1605WDV

FREE AREA in Square Feet and Square Meters

Height in Inches and Meters	Width in Inches and Meters																	
	12 0.30	18 0.46	24 0.61	30 0.76	36 0.91	42 1.07	48 1.22	54 1.37	60 1.52	66 1.68	72 1.83	78 1.98	84 2.13	90 2.29	96 2.44	102 2.59	108 2.74	114 2.90	120 3.05
12 0.30	0.28 0.03	0.51 0.05	0.74 0.07	0.96 0.09	1.19 0.11	1.42 0.13	1.65 0.15	1.87 0.17	2.10 0.20	2.33 0.22	2.55 0.24	2.78 0.26	3.01 0.28	3.24 0.30	3.46 0.32	3.69 0.34	3.92 0.36	4.14 0.38	4.37 0.41
18 0.46	0.49 0.05	0.89 0.08	1.28 0.12	1.68 0.16	2.07 0.19	2.47 0.23	2.86 0.27	3.26 0.30	3.65 0.34	4.05 0.38	4.44 0.41	4.83 0.45	5.23 0.49	5.62 0.52	6.02 0.56	6.41 0.60	6.81 0.63	7.20 0.67	7.60 0.71
24 0.61	0.63 0.06	1.14 0.11	1.65 0.15	2.15 0.20	2.66 0.25	3.17 0.29	3.67 0.34	4.18 0.39	4.69 0.44	5.19 0.48	5.70 0.53	6.20 0.58	6.71 0.62	7.22 0.67	7.72 0.72	8.23 0.76	8.74 0.81	9.24 0.86	9.75 0.91
30 0.76	0.84 0.08	1.52 0.14	2.19 0.20	2.87 0.27	3.54 0.33	4.21 0.39	4.89 0.45	5.56 0.52	6.24 0.58	6.91 0.64	7.58 0.70	8.26 0.77	8.93 0.83	9.61 0.89	10.28 0.96	10.96 1.02	11.63 1.08	12.30 1.14	12.98 1.21
36 0.36	1.05 0.10	1.89 0.18	2.74 0.25	3.58 0.33	4.42 0.41	5.26 0.49	6.10 0.57	6.95 0.65	7.79 0.72	8.63 0.80	9.47 0.88	10.31 0.96	11.15 1.04	12.00 1.11	12.84 1.19	13.68 1.27	14.52 1.35	15.36 1.43	16.21 1.51
42 1.07	1.26 0.12	2.27 0.21	3.28 0.30	4.29 0.40	5.30 0.49	6.31 0.59	7.32 0.68	8.33 0.77	9.34 0.87	10.35 0.96	11.36 1.06	12.37 1.15	13.38 1.24	14.39 1.34	15.39 1.43	16.40 1.52	17.41 1.62	18.42 1.71	19.43 1.81
48 1.22	1.47 0.14	2.65 0.25	3.83 0.36	5.00 0.46	6.18 0.57	7.36 0.68	8.53 0.79	9.71 0.90	10.89 1.01	12.07 1.12	13.24 1.23	14.42 1.34	15.60 1.45	16.77 1.56	17.95 1.67	19.13 1.78	20.31 1.89	21.48 2.00	22.66 2.11
54 1.37	1.68 0.16	3.03 0.28	4.37 0.41	5.72 0.53	7.06 0.66	8.41 0.78	9.75 0.91	11.09 1.03	12.44 1.16	13.78 1.28	15.13 1.41	16.47 1.53	17.82 1.66	19.16 1.78	20.51 1.91	21.85 2.03	23.20 2.16	24.54 2.28	25.89 2.40
60 1.52	1.89 0.18	3.40 0.32	4.92 0.46	6.43 0.60	7.94 0.74	9.45 0.88	10.97 1.02	12.48 1.16	13.99 1.30	15.50 1.44	17.02 1.58	18.53 1.72	20.04 1.86	21.55 2.00	23.07 2.14	24.58 2.28	26.09 2.42	27.60 2.56	29.12 2.70
66 1.68	2.10 0.20	3.78 0.35	5.46 0.51	7.14 0.66	8.82 0.82	10.50 0.98	12.18 1.13	13.86 1.29	15.54 1.44	17.22 1.60	18.90 1.76	20.58 1.91	22.26 2.07	23.94 2.22	25.62 2.38	27.30 2.54	28.98 2.69	30.66 2.85	32.34 3.00
72 1.83	2.31 0.21	4.16 0.39	6.01 0.56	7.85 0.73	9.70 0.90	11.55 1.07	13.40 1.24	15.24 1.42	17.09 1.59	18.94 1.76	20.79 1.93	22.64 2.10	24.48 2.27	26.33 2.45	28.18 2.62	30.03 2.79	31.88 2.96	33.72 3.13	35.57 3.30
78 1.98	2.52 0.23	4.53 0.42	6.55 0.61	8.57 0.80	10.58 0.98	12.60 1.17	14.61 1.36	16.63 1.54	18.64 1.73	20.66 1.92	22.67 2.11								
84 2.13	2.73 0.25	4.91 0.46	7.10 0.66	9.28 0.86	11.46 1.06	13.64 1.27	15.83 1.47	18.01 1.67	20.19 1.88	22.38 2.08	24.56 2.28								
90 2.29	2.94 0.27	5.29 0.49	7.64 0.71	9.99 0.93	12.34 1.15	14.69 1.36	17.04 1.58	19.39 1.80	21.75 2.02	24.10 2.24	26.45 2.46								
96 2.44	3.15 0.29	5.67 0.53	8.19 0.76	10.70 0.99	13.22 1.23	15.74 1.46	18.26 1.70	20.78 1.93	23.30 2.16	25.81 2.40	28.33 2.63								
102 2.59	3.36 0.31	6.04 0.56	8.73 0.81	11.42 1.06	14.10 1.31	16.79 1.56	19.47 1.81	22.16 2.06	24.85 2.31	27.53 2.56	30.22 2.81								
108 2.74	3.57 0.33	6.42 0.60	9.27 0.86	12.13 1.13	14.98 1.39	17.84 1.66	20.69 1.92	23.54 2.19	26.40 2.45	29.25 2.72	32.11 2.98								
114 2.90	3.78 0.35	6.80 0.63	9.82 0.91	12.84 1.19	15.86 1.47	18.88 1.75	21.91 2.04	24.93 2.32	27.95 2.60	30.97 2.88	33.99 3.16								
120 3.05	3.99 0.37	7.18 0.67	10.36 0.96	13.55 1.26	16.74 1.56	19.93 1.85	23.12 2.15	26.31 2.44	29.50 2.74	32.69 3.04	35.88 3.33								

amca WORLDWIDE CERTIFIED RATINGS — WATER PENETRATION, AIR PERFORMANCE, WIND DRIVEN RAIN — AIR MOVEMENT AND CONTROL ASSOCIATION INTERNATIONAL, INC. www.amca.org

amca INTERNATIONAL LISTED
HIGH VELOCITY RAIN RESISTANT WITH BLADES FULLY OPEN AND IMPACT RESISTANT LOUVER
Enhanced Protection Level E
See www.AMCA.org for all certified or listed products
This label does not signify AMCA airflow performance certification.

SCHEDULE TYPE:	Page 2 of 3 Dimensions are in inches (mm).			
PROJECT:				
ENGINEER:	**DATE**	**B SERIES**	**SUPERSEDES**	**DRAWING NO.**
CONTRACTOR:	**5- 28 - 25**	**1600**	**1 - 30 - 24**	**1605WDV**

Nailor Industries Inc. reserves the right to change any information concerning product or pricing without notice.

Nailor Industries Inc.

EXTRUDED ALUMINUM STATIONARY LOUVER
HIGH VELOCITY WIND-DRIVEN RAIN AND IMPACT RESISTANT
5" (127) DEEP • VERTICAL BLADE • PERFORMANCE DATA
MODEL: 1605WDV

AIRFLOW / WATER PENETRATION DATA
for 48" x 48" (1219 x 1219) Louver Size

	Free Area %	53%
	Free Area sq. ft. (sq. m.)	8.53 (0.79)
INTAKE	Free Area Velocity at Point of Beginning Water Penetration at .01 oz./sq. ft. (3 ml/sq. m) (15 min. test duration)	1250 fpm (381 m/min.)*
INTAKE	Air Volume at 1250 fpm Free Area Velocity	10,663 cfm (5032 l/s)
INTAKE	Pressure Drop @ 1250 fpm	.29 in. w.g. (72 Pa)

NOTE: To minimize water penetration when sizing intake louvers, select a Free Area Velocity that is **below** the beginning point of water penetration.*Maximum Free Area Velocity tested is 1250 fpm. Beginning point of water penetration for this model is above 1250 fpm.

WIND DRIVEN RAIN PERFORMANCE

Core Ventilation Rate in fpm (m/s)	0 (0.00)	110 (0.56)	195 (0.99)	279 (1.42)	396 (2.01)	497 (2.52)	588 (2.99)	701 (3.56)	781 (3.97)	891 (4.53)	984 (5.00)
Free Area Ventilation Rate in fpm (m/s)	0 (0.00)	186 (0.95)	330 (1.68)	473 (2.40)	671 (3.41)	842 (4.28)	996 (5.06)	1187 (6.03)	1323 (6.72)	1509 (7.63)	1667 (8.47)
Effectiveness Ratio (%)	100	100	100	100	100	100	100	100	100	100	100
Penetration Class	A	A	A	A	A	A	A	A	A	A	A

Test was based on a 39.375" x 39.375" (1.0 m x 1.0 m) core area louver tested at a rainfall rate of 3" per hour (76 mm/hour) with a wind velocity of **29 mph (13 m/s).**
DISCHARGE LOSS COEFFICIENT CLASS (INTAKE): 2. (Discharge Loss Coefficient Classification is as follows: 1=0.4 and above, 2=0.3 to 0.399, 3 = 0.2 to 0.299, 4 = 0.199 and below.)

Core Ventilation Rate in fpm (m/s)	0 (0.00)	88 (0.45)	199 (1.01)	301 (1.53)	400 (2.03)	485 (2.46)	590 (3.00)	687 (3.49)	787 (4.00)	883 (4.49)	987 (5.01)
Free Area Ventilation Rate in fpm (m/s)	0 (0.00)	149 (0.76)	337 (1.71)	510 (2.59)	678 (3.44)	822 (4.18)	999 (5.07)	1164 (5.91)	1333 (6.77)	1496 (7.60)	1672 (8.49)
Effectiveness Ratio (%)	100	100	100	100	100	100	100	100	100	100	100
Penetration Class	A	A	A	A	A	A	A	A	A	A	A

Test was based on a 39.375" x 39.375" (1.0 m x 1.0 m) core area louver tested at a rainfall rate of 8" per hour (203 mm/hour) with a wind velocity of **50 mph (22 m/s).**
DISCHARGE LOSS COEFFICIENT CLASS (INTAKE): 2. (Discharge Loss Coefficient Classification is as follows: 1=0.4 and above, 2=0.3 to 0.399, 3 = 0.2 to 0.299, 4 = 0.199 and below.)

PRESSURE DROP

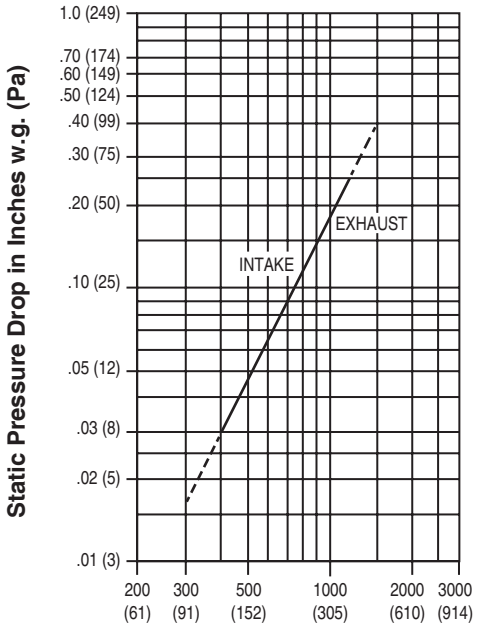

Air Velocity in Feet (Meters) Per Minute Through Free Area

Louver test size: 48" x 48" (1219 x 1219 mm).
Standard air density @ 0.075 lbs/ft³.
Tested to AMCA Fig. 5.5 – 6.5.

Nailor Industries Inc. certifies that the Model 1605WDV shown herein is licensed to bear the AMCA Certified Ratings Program seal. The ratings shown are based on tests and procedures performed in accordance with AMCA Publication 511 and comply with the requirements of the AMCA Certified Ratings Program. The AMCA Certified Ratings Program Seal applies to Air Performance, Water Penetration, and Wind-Driven Rain performance ratings.

Louvers were tested in accordance with AMCA Standard 500-L.

HIGH VELOCITY RAIN RESISTANT WITH BLADES FULLY OPEN AND IMPACT RESISTANT LOUVER
Enhanced Protection Level E
See www.AMCA.org for all certified or listed products
This label does not signify AMCA airflow performance certification.

Nailor Industries Inc. certifies that the 1605WDV shown herein is approved to bear the AMCA International Listing Label. The ratings shown are based on tests and procedures performed in accordance with AMCA publications and comply with the requirements of the AMCA International Listing Label program. The AMCA Listing Label applies to Wind Borne Debris Impact Resistant louvers rated for "Enhanced Protection" and +/- 70PSF with a minimum blade span of less than 12 in. (305mm) and a maximum unsupported blade span of 58 in. (1473 mm) and to High Velocity Wind-Driven Rain Resistant Louvers tested in the fully open position that permits airflow through a louver.

SCHEDULE TYPE:
PROJECT:
ENGINEER:
CONTRACTOR:

Dimensions are in inches (mm).

DATE	B SERIES	SUPERSEDES	DRAWING NO.
5- 28 - 25	1600	1 - 30 - 24	1605WDV

Nailor Industries Inc. reserves the right to change any information concerning product or pricing without notice.

Nailor® Industries Inc.

EXTRUDED ALUMINUM STATIONARY LOUVER
FLORIDA PRODUCT APPROVED
HIGH VELOCITY WIND-DRIVEN RAIN RESISTANT
5" (127) DEEP • VERTICAL BLADE
MODEL: 1605WDVF

Intertek

QUALIFICATIONS:
- **Florida Product Approval No. : 19273.3**
- **Intertek Listed Building Product: Exterior Louvers.**
- **Tested in accordance with: TAS-201 (Large Missile Impact Test), TAS-202 (Uniform Static Air Pressure Test), TAS-203 (Cyclic Wind Pressure Loading Test).**
- **AMCA 500-L (Wind-Driven Rain, Water Penetration, Airflow).**
- **AMCA 540 (Wind-Borne Debris Impact Test [Enhanced "Level E" Protection]).**
- **AMCA 550 (High Velocity Wind-Driven Rain Resistance Test).**
- **Wind load rating +/– 50 PSF (standard) (up to 130 PSF dependent on size and configuration).**

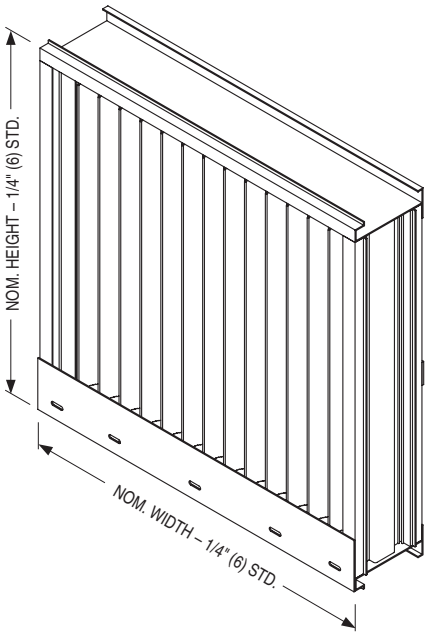

STANDARD CONSTRUCTION:

FRAME: 5" (127) deep, Type 6063-T6 extruded aluminum, .080" (2.03) nominal wall thickness. Integral downspouts and caulking slot provided.

BLADES: Type 6063-T6 extruded aluminum, .070" (1.78) nominal wall thickness, with reinforcing bosses.

BLADE ANGLE: Fixed at 45 degrees.

BLADE SPACING: Approximately 1 1/2" (38) on centers.

BLADE SUPPORT: 2.5" (64) strap every 60" (1524) or less in height.

SCREEN: 5/8" x .050 (16 x 1.3) expanded, flattened aluminum bird screen in removable frame, inside (rear) mount (adds approximately 3/8" [10] to louver depth).

FINISH: Mill.

MINIMUM SIZE: 12" W x 12" H (305 x 305).

MAX. SINGLE SECTION SIZE: 72" W x 120" H (1829 x 3048) 60 sq. ft. (5.6 m^2). Larger louvers will require field assembly of smaller sections.

OVERALL MAX. SIZE: Unlimited Width x 120" H (3048).

APPROXIMATE SHIPPING WEIGHT: 5 lbs. per ft^2 (24.4 Kg per m^2).

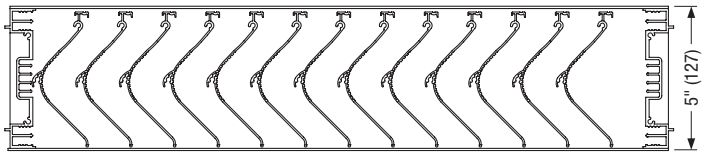

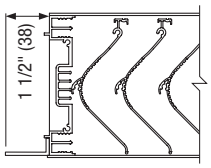

OPT. FLANGED FRAME
(FL15 STD.)

OPTIONS:
- ❑ **FL15** Flanged Frame, 1 1/2" (38).
- ❑ **FL20** Flanged Frame, 2" (51).
- ❑ **BSSS** Type 304 S.S. Bird Screen.
- ❑ **BSN** No Bird Screen.
- ❑ **ISA** Aluminum Insect Screen.
- ❑ **ISSS** Type 304 S.S. Insect Screen.
- ❑ **ESI** Extended Sill.
- ❑ **PASI** Sill Pan.
- ❑ Other: _____ .

OPTIONAL FINISHES:
- ❑ **PC3** Powder Coat AAMA 2603. Color: ____ .
- ❑ **PC4** High Performance Powder Coat AAMA 2604 (Equivalent to 50% Kynar®). Color: ____ .
- ❑ **PC5** Fluoropolymer Powder Coat AAMA 2605 (Equivalent to 70% Kynar®). Color: ____ .
- ❑ **PCC** Prime Coat.
- ❑ **AN04** Clear Anodized 204-R1.
- ❑ **AN15** Clear Anodized 215-R1.
- ❑ **ANLB** Light Bronze.
- ❑ **ANMB** Medium Bronze.
- ❑ **ANDB** Dark Bronze.
- ❑ **ANBK** Black.

For Installation Instructions, see approved NOA.

SCHEDULE TYPE:	Page 1 of 3 Dimensions are in inches (mm).			
PROJECT:				
ENGINEER:	**DATE**	**B SERIES**	**SUPERSEDES**	**DRAWING NO.**
CONTRACTOR:	**1 - 22 - 26**	**1600F**	**11 - 25 - 24**	**1605WDVF**

Nailor Industries Inc. reserves the right to change any information concerning product or pricing without notice.

Nailor® Industries Inc.

EXTRUDED ALUMINUM STATIONARY LOUVER
FLORIDA PRODUCT APPROVED
HIGH VELOCITY WIND-DRIVEN RAIN RESISTANT
5" (127) DEEP • VERTICAL BLADE • PERFORMANCE DATA
MODEL: 1605WDVF

Intertek

FREE AREA in Square Feet and Square Meters

Height in Inches and Meters	Width in Inches and Meters																		
	12	18	24	30	36	42	48	54	60	66	72	78	84	90	96	102	108	114	120
	0.30	0.46	0.61	0.76	0.91	1.07	1.22	1.37	1.52	1.68	1.83	1.98	2.13	2.29	2.44	2.59	2.74	2.90	3.05
12	0.29	0.52	0.74	0.97	1.20	1.43	1.66	1.89	2.12	2.35	2.58	2.81	3.03	3.26	3.49	3.72	3.95	4.18	4.41
0.30	0.03	0.05	0.07	0.09	0.11	0.13	0.15	0.18	0.20	0.22	0.24	0.26	0.28	0.30	0.32	0.35	0.37	0.39	0.41
18	0.50	0.90	1.29	1.69	2.09	2.49	2.89	3.29	3.68	4.08	4.48	4.88	5.28	5.67	6.07	6.47	6.87	7.27	7.67
0.46	0.05	0.08	0.12	0.16	0.19	0.23	0.27	0.31	0.34	0.38	0.42	0.45	0.49	0.53	0.56	0.60	0.64	0.68	0.71
24	0.64	1.15	1.67	2.18	2.69	3.20	3.72	4.23	4.74	5.26	5.77	6.28	6.79	7.31	7.82	8.33	8.85	9.36	9.87
0.61	0.06	0.11	0.15	0.20	0.25	0.30	0.35	0.39	0.44	0.49	0.54	0.58	0.63	0.68	0.73	0.77	0.82	7.00	0.92
30	0.85	1.53	2.22	2.90	3.58	4.26	4.94	5.63	6.31	6.99	7.67	8.35	9.04	9.72	10.40	11.08	11.76	12.45	13.13
0.76	0.08	0.14	0.21	0.27	0.33	0.40	0.46	0.52	0.59	0.65	0.71	0.78	0.84	0.90	0.97	1.03	1.09	1.16	1.22
36	1.06	1.92	2.77	3.62	4.47	5.32	6.17	7.02	7.87	8.72	9.58	10.43	11.28	12.13	12.98	13.83	14.68	15.53	16.38
0.36	0.10	0.18	0.26	0.34	0.42	0.49	0.57	0.65	0.73	0.81	0.89	0.97	1.05	1.13	1.21	1.28	1.36	1.44	1.52
42	1.28	2.30	3.32	4.34	5.36	6.38	7.40	8.42	9.44	10.46	11.48	12.50	13.52	14.54	15.56	16.58	17.60	18.62	19.64
1.07	0.12	0.21	0.31	0.40	0.50	0.59	0.69	0.78	0.88	0.97	1.07	1.16	1.26	1.35	1.45	1.54	1.64	1.73	1.82
48	1.49	2.68	3.87	5.06	6.24	7.43	8.77	9.81	11.00	12.19	13.38	14.57	15.76	16.95	18.14	19.33	20.52	21.71	22.90
1.22	0.14	0.25	0.36	0.47	0.58	0.69	0.81	0.91	1.02	1.13	1.24	1.35	1.46	1.57	1.69	1.80	1.91	2.02	2.13
54	1.70	3.06	4.42	5.77	7.13	8.49	9.85	11.21	12.57	13.93	15.28	16.64	18.00	19.36	20.72	22.08	23.44	24.79	26.15
1.37	0.16	0.28	0.41	0.54	0.66	0.79	0.92	1.04	1.17	1.29	1.42	1.55	1.67	1.80	1.92	2.05	2.18	2.30	2.43
60	1.91	3.44	4.97	6.49	8.02	9.55	11.08	12.60	14.13	15.66	17.19	18.72	20.24	21.77	23.30	24.83	26.35	27.88	29.41
1.52	0.18	0.32	0.46	0.60	0.75	0.89	1.03	1.17	1.31	1.45	1.60	1.74	1.88	2.02	2.16	2.31	2.45	2.59	2.73
66	2.12	3.82	5.52	7.21	8.91	10.61	12.30	14.00	15.70	17.39	19.09	20.79	22.48	24.18	25.88	27.58	29.27	30.97	32.67
1.68	0.20	0.35	0.51	0.67	0.83	0.99	1.14	1.30	1.46	1.62	1.77	1.93	2.09	2.25	2.40	2.56	2.72	2.88	3.03
72	2.33	4.20	6.06	7.93	9.80	11.66	13.53	15.40	17.26	19.13	20.99	22.86	24.73	26.59	28.46	30.32	32.19	34.06	35.92
1.83	0.22	0.39	0.56	0.74	0.91	1.08	1.26	1.43	1.60	1.78	1.95	2.12	2.30	2.47	2.64	2.82	2.99	3.16	3.34
78	2.54	4.58	6.61	8.65	10.69	12.72	14.76	16.79	18.83	20.86	22.90								
1.98	0.24	0.43	0.61	0.80	0.99	1.18	1.37	1.56	1.75	1.94	2.13								
84	2.76	4.96	7.16	9.37	11.57	13.78	15.98	18.19	20.39	22.60	24.80								
2.13	0.26	0.46	0.67	0.87	1.08	1.28	1.48	1.69	1.89	2.10	2.30								
90	2.97	5.34	7.71	10.09	12.46	14.84	17.21	19.58	21.96	24.33	26.70								
2.29	0.28	0.50	0.72	0.94	1.16	1.38	1.60	1.82	2.04	2.26	2.48								
96	3.18	5.72	8.26	10.81	13.35	15.89	18.44	20.98	23.52	26.06	28.61								
2.44	0.30	0.53	0.77	1.00	1.24	1.48	1.71	1.95	2.19	2.42	2.66								
102	3.39	6.10	8.81	11.53	14.24	16.95	19.66	22.37	25.09	27.80	30.51								
2.59	0.31	0.57	0.82	1.07	1.32	1.57	1.83	2.08	2.33	2.58	2.83								
108	3.60	6.48	9.36	12.24	15.13	18.01	20.89	23.77	26.65	29.53	32.41								
2.74	0.33	0.60	0.87	1.14	1.41	1.67	1.94	2.21	2.48	2.74	3.01								
114	3.81	6.86	9.91	12.96	16.01	19.06	22.11	25.16	28.22	31.27	34.32								
2.90	0.35	0.64	0.92	1.20	1.49	1.77	2.05	2.34	2.62	2.90	3.19								
120	4.02	7.24	10.46	13.68	16.90	20.12	23.34	26.56	29.78	33.00	36.22								
3.05	0.37	0.67	0.97	1.27	1.57	1.87	2.17	2.47	2.77	3.07	3.36								

SCHEDULE TYPE:	Page 2 of 3 Dimensions are in inches (mm).			
PROJECT:				
ENGINEER:	**DATE**	**B SERIES**	**SUPERSEDES**	**DRAWING NO.**
CONTRACTOR:	**1 - 22 - 26**	**1600F**	**11 - 25 - 24**	**1605WDVF**

Nailor Industries Inc. reserves the right to change any information concerning product or pricing without notice.

Nailor® Industries Inc.

EXTRUDED ALUMINUM STATIONARY LOUVER
FLORIDA PRODUCT APPROVED
HIGH VELOCITY WIND-DRIVEN RAIN RESISTANT
5" (127) DEEP • VERTICAL BLADE • PERFORMANCE DATA
MODEL: 1605WDVF

Intertek

AIRFLOW / WATER PENETRATION DATA
for 48" x 48" (1219 x 1219) Louver Size

	Free Area %	55%
	Free Area sq. ft. (sq. m.)	8.77 (0.81)
INTAKE	Free Area Velocity at Point of Beginning Water Penetration at .01 oz./sq. ft. (3 ml/sq. m) (15 min. test duration)	1250 fpm (381 m/min.)*
INTAKE	Air Volume at 1250 fpm Free Area Velocity	10,963 cfm (5174 l/s)
INTAKE	Pressure Drop @ 1000 fpm	.18 in. w.g. (45 Pa)

NOTE: To minimize water penetration when sizing intake louvers, select a Free Area Velocity that is **below** the beginning point of water penetration.*Maximum Free Area Velocity tested is 1250 fpm. Beginning point of water penetration for this model is above 1250 fpm.

WIND DRIVEN RAIN PERFORMANCE

Core Ventilation Rate in fpm (m/s)	0 (0.00)	110 (0.56)	195 (0.99)	279 (1.42)	396 (2.01)	497 (2.52)	588 (2.99)	701 (3.56)	781 (3.97)	891 (4.53)	984 (5.00)
Free Area Ventilation Rate in fpm (m/s)	0 (0.00)	186 (0.95)	330 (1.68)	473 (2.40)	671 (3.41)	842 (4.28)	996 (5.06)	1187 (6.03)	1323 (6.72)	1509 (7.63)	1667 (8.47)
Effectiveness Ratio (%)	100	100	100	100	100	100	100	100	100	100	100
Penetration Class	A	A	A	A	A	A	A	A	A	A	A

Test was based on a 39.375" x 39.375" (1.0 m x 1.0 m) core area louver tested at a rainfall rate of 3" per hour (76 mm/hour) with a wind velocity of **29 mph (13 m/s).**
DISCHARGE LOSS COEFFICIENT CLASS (INTAKE): 2. (Discharge Loss Coefficient Classification is as follows: 1=0.4 and above, 2=0.3 to 0.399, 3 = 0.2 to 0.299, 4 = 0.199 and below.)

Core Ventilation Rate in fpm (m/s)	0 (0.00)	88 (0.45)	199 (1.01)	301 (1.53)	400 (2.03)	485 (2.46)	590 (3.00)	687 (3.49)	787 (4.00)	883 (4.49)	987 (5.01)
Free Area Ventilation Rate in fpm (m/s)	0 (0.00)	149 (0.76)	337 (1.71)	510 (2.59)	678 (3.44)	822 (4.18)	999 (5.07)	1164 (5.91)	1333 (6.77)	1496 (7.60)	1672 (8.49)
Effectiveness Ratio (%)	100	100	100	100	100	100	100	100	100	100	100
Penetration Class	A	A	A	A	A	A	A	A	A	A	A

Test was based on a 39.375" x 39.375" (1.0 m x 1.0 m) core area louver tested at a rainfall rate of 8" per hour (203 mm/hour) with a wind velocity of **50 mph (22 m/s).**
DISCHARGE LOSS COEFFICIENT CLASS (INTAKE): 2. (Discharge Loss Coefficient Classification is as follows: 1=0.4 and above, 2=0.3 to 0.399, 3 = 0.2 to 0.299, 4 = 0.199 and below.)

PRESSURE DROP

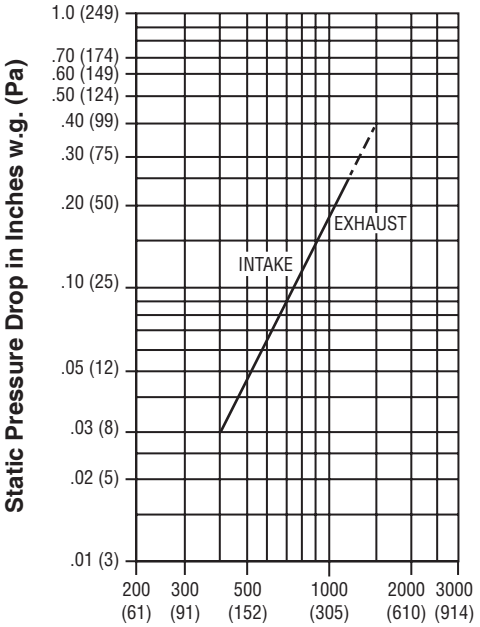

Air Velocity in Feet (Meters) Per Minute Through Free Area

Louver test size: 48" x 48" (1219 x 1219 mm).
Standard air density @ 0.075 lbs/ft³.
Tested to AMCA Fig. 5.5 – 6.5.

amca WORLDWIDE CERTIFIED RATINGS — WATER PENETRATION, AIR PERFORMANCE, WIND DRIVEN RAIN — AIR MOVEMENT AND CONTROL ASSOCIATION INTERNATIONAL, INC. www.amca.org

Nailor Industries Inc. certifies that the Model 1605WDVF shown herein is licensed to bear the AMCA Certified Ratings Program seal. The ratings shown are based on tests and procedures performed in accordance with AMCA Publication 511 and comply with the requirements of the AMCA Certified Ratings Program. The AMCA Certified Ratings Program Seal applies to Air Performance, Water Penetration, and Wind-Driven Rain performance ratings.

Louvers were tested in accordance with AMCA Standard 500-L.

amca INTERNATIONAL LISTED — HIGH VELOCITY RAIN RESISTANT WITH BLADES FULLY OPEN AND IMPACT RESISTANT LOUVER *Enhanced Protection Level E* — See www.AMCA.org for all certified or listed products — This label does not signify AMCA airflow performance certification.

Nailor Industries Inc. certifies that the 1605WDVF shown herein is approved to bear the AMCA International Listing Label. The ratings shown are based on tests and procedures performed in accordance with AMCA publications and comply with the requirements of the AMCA International Listing Label program. The AMCA International Listing Label applies to pressure cycle tested wind-borne debris impact resistant louvers rated for "Enhanced Protection" and +/- 50PSF with a minimum blade span of less than 12 in. (305mm) and a maximum unsupported blade span of 58 in. (1473 mm) and to High Velocity Wind-Driven Rain Resistant Louvers tested in the fully open position that permits airflow through a louver.

SCHEDULE TYPE:
PROJECT:
ENGINEER:
CONTRACTOR:

Dimensions are in inches (mm).

DATE	B SERIES	SUPERSEDES	DRAWING NO.
1 - 22 - 26	1600F	11 - 25 - 24	1605WDVF

Nailor Industries Inc. reserves the right to change any information concerning product or pricing without notice.

Nailor® Industries Inc.

EXTRUDED ALUMINUM STATIONARY LOUVER
MIAMI-DADE QUALIFIED • FLORIDA PRODUCT APPROVED
HIGH VELOCITY WIND-DRIVEN RAIN RESISTANT
5" (127) DEEP • VERTICAL BLADE
MODEL: 1605WDVM

QUALIFICATIONS:

- **Miami-Dade County NOA No. : 26-0518.09**
- **Florida Product Approval No. : 41441.2**
- **Texas Department of Insurance Evaluation ID : LVR-29**
- **Tested in accordance with: TAS-100A (Wind-Driven Rain Test), TAS-201 (Large Missile Impact Test), TAS-202 (Uniform Static Air Pressure Test), TAS-203 (Cyclic Wind Pressure Loading Test).**
- **AMCA 500-L (Wind-Driven Rain, Water Penetration, Air Performance).**
- **AMCA 540 (Wind-Borne Debris Impact Test [Enhanced "Level E" Protection]).**
- **AMCA 550 (High Velocity Wind-Driven Rain Resistance Test).**
- **Wind load rating +/– 130 PSF.**

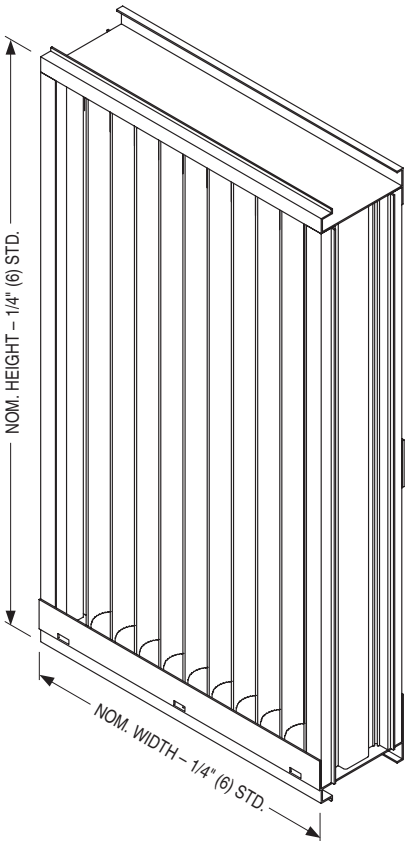

STANDARD CONSTRUCTION:

FRAME: 5" (127) deep, Type 6063-T6 extruded aluminum, .080" (2.03) nominal wall thickness. Integral downspouts and caulking slot provided.

BLADES: Type 6063-T6 extruded aluminum, .060" (1.52) nominal wall thickness, with reinforcing bosses.

BLADE ANGLE: Fixed at 45 degrees.

BLADE SPACING: Approximately 1 1/2" (38) on centers.

BLADE SUPPORT: 2.5" (64) strap every 60" (1524) or less in height.

SCREEN: 3/4" x .050 (19 x 1.3) expanded, flattened aluminum bird screen in removable frame, inside (rear) mount (adds approximately 3/8" [10] to louver depth).

FINISH: Mill.

MINIMUM SIZE: 12" W x 12" H (305 x 305).

MAX. SINGLE SECTION SIZE: 72" W x 120" H (1829 x 3048) or 120" W x 72" H (3048 x 1829). 60 sq. ft. (5.6 m²). Larger louvers will require field assembly of smaller sections.

MAXIMUM SIZE: Unlimited Width x 120" H (3048).

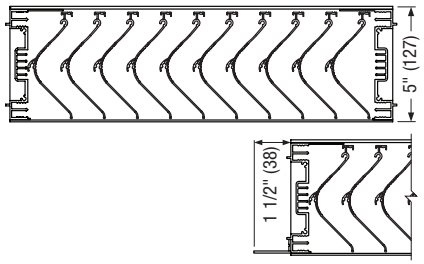

OPT. FLANGED FRAME (FL15 STD.)

OPTIONS:

- ❑ **FL15** Flanged Frame, 1 1/2" (38).
- ❑ **FL20** Flanged Frame, 2" (51).
- ❑ **BSSS** Type 304 S.S. Bird Screen.
- ❑ **BSN** No Bird Screen.
- ❑ **ISA** Aluminum Insect Screen.
- ❑ **ISSS** Type 304 S.S. Insect Screen.
- ❑ **ESI** Extended Sill.
- ❑ **PASI** Sill Pan.
- ❑ Other: _____ .

OPTIONAL FINISHES:

- ❑ **PC3** Powder Coat AAMA 2603. Color: ____ .
- ❑ **PC4** High Performance Powder Coat AAMA 2604 (Equivalent to 50% Kynar®). Color: ____ .
- ❑ **PC5** Fluoropolymer Powder Coat AAMA 2605 (Equivalent to 70% Kynar®). Color: ____ .
- ❑ **PCC** Prime Coat.
- ❑ **AN04** Clear Anodized 204-R1.
- ❑ **AN15** Clear Anodized 215-R1.
- ❑ **ANLB** Light Bronze.
- ❑ **ANMB** Medium Bronze.
- ❑ **ANDB** Dark Bronze.
- ❑ **ANBK** Black.

For Installation Instructions, see approved NOA.

SCHEDULE TYPE:	Page 1 of 3 Dimensions are in inches (mm).			
PROJECT:				
ENGINEER:	**DATE**	**B SERIES**	**SUPERSEDES**	**DRAWING NO.**
CONTRACTOR:	**6 - 29 - 26**	**1600M**	**3 - 27 - 26**	**1605WDVM**

Nailor Industries Inc. reserves the right to change any information concerning product or pricing without notice.

Nailor® Industries Inc.

EXTRUDED ALUMINUM STATIONARY LOUVER
MIAMI-DADE QUALIFIED • FLORIDA PRODUCT APPROVED
HIGH VELOCITY WIND-DRIVEN RAIN RESISTANT
5" (127) DEEP • VERTICAL BLADE • PERFORMANCE DATA
MODEL: 1605WDVM

FREE AREA in Square Feet and Square Meters

Height in Inches and Meters	Width in Inches and Meters																	
	12 0.30	18 0.46	24 0.61	30 0.76	36 0.91	42 1.07	48 1.22	54 1.37	60 1.52	66 1.68	72 1.83	78 1.98	84 2.13	90 2.29	96 2.44	102 2.59	108 2.74	114 2.90	120 3.05
12 0.30	0.28 0.03	0.51 0.05	0.74 0.07	0.96 0.09	1.19 0.11	1.42 0.13	1.65 0.15	1.87 0.17	2.10 0.20	2.33 0.22	2.55 0.24	2.78 0.26	3.01 0.28	3.24 0.30	3.46 0.32	3.69 0.34	3.92 0.36	4.14 0.38	4.37 0.41
18 0.46	0.49 0.05	0.89 0.08	1.28 0.12	1.68 0.16	2.07 0.19	2.47 0.23	2.86 0.27	3.26 0.30	3.65 0.34	4.05 0.38	4.44 0.41	4.83 0.45	5.23 0.49	5.62 0.52	6.02 0.56	6.41 0.60	6.81 0.63	7.20 0.67	7.60 0.71
24 0.61	0.63 0.06	1.14 0.11	1.65 0.15	2.15 0.20	2.66 0.25	3.17 0.29	3.67 0.34	4.18 0.39	4.69 0.44	5.19 0.48	5.70 0.53	6.20 0.58	6.71 0.62	7.22 0.67	7.72 0.72	8.23 0.76	8.74 0.81	9.24 0.86	9.75 0.91
30 0.76	0.84 0.08	1.52 0.14	2.19 0.20	2.87 0.27	3.54 0.33	4.21 0.39	4.89 0.45	5.56 0.52	6.24 0.58	6.91 0.64	7.58 0.70	8.26 0.77	8.93 0.83	9.61 0.89	10.28 0.96	10.96 1.02	11.63 1.08	12.30 1.14	12.98 1.21
36 0.36	1.05 0.10	1.89 0.18	2.74 0.25	3.58 0.33	4.42 0.41	5.26 0.49	6.10 0.57	6.95 0.65	7.79 0.72	8.63 0.80	9.47 0.88	10.31 0.96	11.15 1.04	12.00 1.11	12.84 1.19	13.68 1.27	14.52 1.35	15.36 1.43	16.21 1.51
42 1.07	1.26 0.12	2.27 0.21	3.28 0.30	4.29 0.40	5.30 0.49	6.31 0.59	7.32 0.68	8.33 0.77	9.34 0.87	10.35 0.96	11.36 1.06	12.37 1.15	13.38 1.24	14.39 1.34	15.39 1.43	16.40 1.52	17.41 1.62	18.42 1.71	19.43 1.81
48 1.22	1.47 0.14	2.65 0.25	3.83 0.36	5.00 0.46	6.18 0.57	7.36 0.68	8.53 0.79	9.71 0.90	10.89 1.01	12.07 1.12	13.24 1.23	14.42 1.34	15.60 1.45	16.77 1.56	17.95 1.67	19.13 1.78	20.31 1.89	21.48 2.00	22.66 2.11
54 1.37	1.68 0.16	3.03 0.28	4.37 0.41	5.72 0.53	7.06 0.66	8.41 0.78	9.75 0.91	11.09 1.03	12.44 1.16	13.78 1.28	15.13 1.41	16.47 1.53	17.82 1.66	19.16 1.78	20.51 1.91	21.85 2.03	23.20 2.16	24.54 2.28	25.89 2.40
60 1.52	1.89 0.18	3.40 0.32	4.92 0.46	6.43 0.60	7.94 0.74	9.45 0.88	10.97 1.02	12.48 1.16	13.99 1.30	15.50 1.44	17.02 1.58	18.53 1.72	20.04 1.86	21.55 2.00	23.07 2.14	24.58 2.28	26.09 2.42	27.60 2.56	29.12 2.70
66 1.68	2.10 0.20	3.78 0.35	5.46 0.51	7.14 0.66	8.82 0.82	10.50 0.98	12.18 1.13	13.86 1.29	15.54 1.44	17.22 1.60	18.90 1.76	20.58 1.91	22.26 2.07	23.94 2.22	25.62 2.38	27.30 2.54	28.98 2.69	30.66 2.85	32.34 3.00
72 1.83	2.31 0.21	4.16 0.39	6.01 0.56	7.85 0.73	9.70 0.90	11.55 1.07	13.40 1.24	15.24 1.42	17.09 1.59	18.94 1.76	20.79 1.93	22.64 2.10	24.48 2.27	26.33 2.45	28.18 2.62	30.03 2.79	31.88 2.96	33.72 3.13	35.57 3.30
78 1.98	2.52 0.23	4.53 0.42	6.55 0.61	8.57 0.80	10.58 0.98	12.60 1.17	14.61 1.36	16.63 1.54	18.64 1.73	20.66 1.92	22.67 2.11								
84 2.13	2.73 0.25	4.91 0.46	7.10 0.66	9.28 0.86	11.46 1.06	13.64 1.27	15.83 1.47	18.01 1.67	20.19 1.88	22.38 2.08	24.56 2.28								
90 2.29	2.94 0.27	5.29 0.49	7.64 0.71	9.99 0.93	12.34 1.15	14.69 1.36	17.04 1.58	19.39 1.80	21.75 2.02	24.10 2.24	26.45 2.46								
96 2.44	3.15 0.29	5.67 0.53	8.19 0.76	10.70 0.99	13.22 1.23	15.74 1.46	18.26 1.70	20.78 1.93	23.30 2.16	25.81 2.40	28.33 2.63								
102 2.59	3.36 0.31	6.04 0.56	8.73 0.81	11.42 1.06	14.10 1.31	16.79 1.56	19.47 1.81	22.16 2.06	24.85 2.31	27.53 2.56	30.22 2.81								
108 2.74	3.57 0.33	6.42 0.60	9.27 0.86	12.13 1.13	14.98 1.39	17.84 1.66	20.69 1.92	23.54 2.19	26.40 2.45	29.25 2.72	32.11 2.98								
114 2.90	3.78 0.35	6.80 0.63	9.82 0.91	12.84 1.19	15.86 1.47	18.88 1.75	21.91 2.04	24.93 2.32	27.95 2.60	30.97 2.88	33.99 3.16								
120 3.05	3.99 0.37	7.18 0.67	10.36 0.96	13.55 1.26	16.74 1.56	19.93 1.85	23.12 2.15	26.31 2.44	29.50 2.74	32.69 3.04	35.88 3.33								

SCHEDULE TYPE:	Page 2 of 3 Dimensions are in inches (mm).			
PROJECT:				
ENGINEER:	**DATE**	**B SERIES**	**SUPERSEDES**	**DRAWING NO.**
CONTRACTOR:	**6 - 29 - 26**	**1600M**	**3 - 27 - 26**	**1605WDVM**

Nailor Industries Inc. reserves the right to change any information concerning product or pricing without notice.

Nailor® Industries Inc.

EXTRUDED ALUMINUM STATIONARY LOUVER
MIAMI-DADE QUALIFIED • FLORIDA PRODUCT APPROVED
HIGH VELOCITY WIND-DRIVEN RAIN RESISTANT
5" (127) DEEP • VERTICAL BLADE • PERFORMANCE DATA
MODEL: 1605WDVM

AIRFLOW / WATER PENETRATION DATA
for 48" x 48" (1219 x 1219) Louver Size

	Free Area %	53%
	Free Area sq. ft. (sq. m.)	8.53 (0.79)
INTAKE	Free Area Velocity at Point of Beginning Water Penetration at .01 oz./sq. ft. (3 ml/sq. m) (15 min. test duration)	1250 fpm (381 m/min.)*
INTAKE	Air Volume at 1250 fpm Free Area Velocity	10,663 cfm (5032 l/s)
INTAKE	Pressure Drop @ 1250 fpm	.29 in. w.g. (72 Pa)

NOTE: To minimize water penetration when sizing intake louvers, select a Free Area Velocity that is **below** the beginning point of water penetration.*Maximum Free Area Velocity tested is 1250 fpm. Beginning point of water penetration for this model is above 1250 fpm.

WIND DRIVEN RAIN PERFORMANCE

Core Ventilation Rate in fpm (m/s)	0 (0.00)	110 (0.56)	195 (0.99)	279 (1.42)	396 (2.01)	497 (2.52)	588 (2.99)	701 (3.56)	781 (3.97)	891 (4.53)	984 (5.00)
Free Area Ventilation Rate in fpm (m/s)	0 (0.00)	186 (0.95)	330 (1.68)	473 (2.40)	671 (3.41)	842 (4.28)	996 (5.06)	1187 (6.03)	1323 (6.72)	1509 (7.63)	1667 (8.47)
Effectiveness Ratio (%)	100	100	100	100	100	100	100	100	100	100	100
Penetration Class	A	A	A	A	A	A	A	A	A	A	A

Test was based on a 39.375" x 39.375" (1.0 m x 1.0 m) core area louver tested at a rainfall rate of 3" per hour (76 mm/hour) with a wind velocity of **29 mph (13 m/s).**
DISCHARGE LOSS COEFFICIENT CLASS (INTAKE): 2. (Discharge Loss Coefficient Classification is as follows: 1=0.4 and above, 2=0.3 to 0.399, 3 = 0.2 to 0.299, 4 = 0.199 and below.)

Core Ventilation Rate in fpm (m/s)	0 (0.00)	88 (0.45)	199 (1.01)	301 (1.53)	400 (2.03)	485 (2.46)	590 (3.00)	687 (3.49)	787 (4.00)	883 (4.49)	987 (5.01)
Free Area Ventilation Rate in fpm (m/s)	0 (0.00)	149 (0.76)	337 (1.71)	510 (2.59)	678 (3.44)	822 (4.18)	999 (5.07)	1164 (5.91)	1333 (6.77)	1496 (7.60)	1672 (8.49)
Effectiveness Ratio (%)	100	100	100	100	100	100	100	100	100	100	100
Penetration Class	A	A	A	A	A	A	A	A	A	A	A

Test was based on a 39.375" x 39.375" (1.0 m x 1.0 m) core area louver tested at a rainfall rate of 8" per hour (203 mm/hour) with a wind velocity of **50 mph (22 m/s).**
DISCHARGE LOSS COEFFICIENT CLASS (INTAKE): 2. (Discharge Loss Coefficient Classification is as follows: 1=0.4 and above, 2=0.3 to 0.399, 3 = 0.2 to 0.299, 4 = 0.199 and below.)

PRESSURE DROP

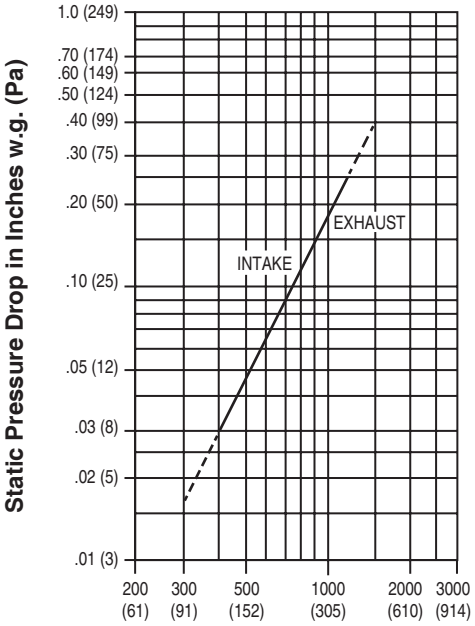

Air Velocity in Feet (Meters) Per Minute Through Free Area

Louver test size: 48" x 48" (1219 x 1219 mm).
Standard air density @ 0.075 lbs/ft³.
Tested to AMCA Fig. 5.5 – 6.5.

amca WORLDWIDE CERTIFIED RATINGS — WATER PENETRATION, AIR PERFORMANCE, WIND DRIVEN RAIN — AIR MOVEMENT AND CONTROL ASSOCIATION INTERNATIONAL, INC. — www.amca.org

Nailor Industries Inc. certifies that the Model 1605WDVM shown herein is licensed to bear the AMCA Certified Ratings Program seal. The ratings shown are based on tests and procedures performed in accordance with AMCA Publication 511 and comply with the requirements of the AMCA Certified Ratings Program. The AMCA Certified Ratings Program seal applies to Water Penetration, Wind Driven Rain and Air Performance ratings.

Louvers were tested in accordance with AMCA Standard 500-L.

amca INTERNATIONAL LISTED

HIGH VELOCITY RAIN RESISTANT WITH BLADES FULLY OPEN AND IMPACT RESISTANT LOUVER
Enhanced Protection Level E
See www.AMCA.org for all certified or listed products
This label does not signify AMCA airflow performance certification.

Nailor Industries Inc. certifies that the 1605WDVM louver shown herein is approved to bear the AMCA International Listing Label. The ratings shown are based on tests and procedures performed in accordance with AMCA publications and comply with the requirements of the AMCA International Listing Label program. The AMCA International Listing Label applies to pressure cycle tested wind borne debris impact resistant louvers rated for Enhanced Protection and +/- 130PSF with a minimum blade span of less than 12 in. (305mm) and a maximum unsupported blade span of 58 in. (1473 mm) and to High Velocity Wind-Driven Rain Resistant Louvers tested in the fully open position that permits airflow through a louver.

SCHEDULE TYPE:
PROJECT:
ENGINEER:
CONTRACTOR:

Dimensions are in inches (mm).

DATE	B SERIES	SUPERSEDES	DRAWING NO.
6 - 29 - 26	1600M	3 - 27 - 26	1605WDVM

Nailor Industries Inc. reserves the right to change any information concerning product or pricing without notice.

EXTRUDED ALUMINUM STATIONARY LOUVER
WIND-DRIVEN RAIN RESISTANT
6" (152) DEEP • HORIZONTAL BLADE
MODEL: 1606WD

Nailor® Industries Inc.

Model 1606WD Wind-Driven Resistant Horizontal Drainable Blade Louver provides maximum weather protection in a 6" (152) deep frame, with pleasing sight-proof aesthetics that compliment any structure's exterior styling. Suitable for use in exhaust and low to medium velocity intake applications, the drainable head and drainable blade design divert collected water down concealed side downspouts and out the sill. Blades are reinforced with full length integral bosses for superior strength and the 6" (152) deep channel or optional flanged frame installs easily in most common wall configurations. Model 1606WD is AMCA Licensed for Wind-Driven Rain, Water Penetration and Air Performance.

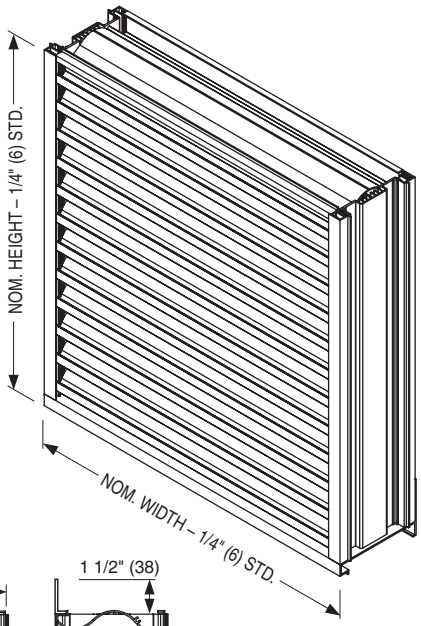

STANDARD CONSTRUCTION:

FRAME: 6" (152) deep, Type 6063-T6 extruded aluminum, .080" (2.03) nominal wall thickness. Integral downspouts and caulking slot provided.

BLADES: Type 6063-T6 extruded aluminum, .080" (2.03) nominal wall thickness, with reinforcing bosses.

BLADE ANGLE: Fixed at 30 degrees.

BLADE SPACING: Approximately 1.94" (49) on centers.

BLADE SUPPORT BLADES: Concealed type, factory installed on rear of louver on maximum 60" (1524) centers. Reinforced with 1 1/2" x 2" (38 x 51) angle (adds 2" [51] to overall louver depth).

MULLIONS: Concealed type allowing continuous line appearance up to 120" (3048) wide. Larger assemblies require seperate visible frames with downspouts.

SCREEN: 5/8" x .050 (15.9 x 1.27) expanded, flattened aluminum bird screen in removable frame, inside (rear) mount (adds approx. 3/8" [10] to louver depth).

FINISH: Mill.

MINIMUM SIZE: 12" W x 12" H (305 x 305).

MAX. SINGLE SECTION SIZE: 120" W x 84" H (3048 x 2134) or 84" W x 120" H (2134 x 3048). 70 sq. ft. (6.5 m_2). Larger louvers will require field assembly of smaller sections.

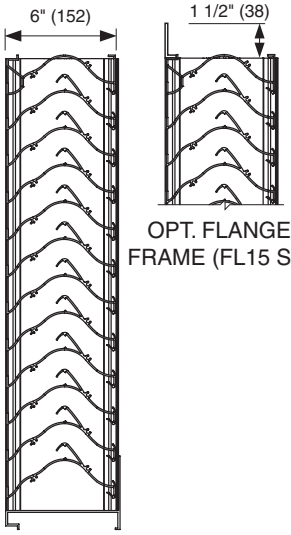

OPT. FLANGED FRAME (FL15 STD.)

amca WORLDWIDE CERTIFIED RATINGS
WATER PENETRATION
AIR PERFORMANCE
WIND DRIVEN RAIN
AIR MOVEMENT AND CONTROL ASSOCIATION INTERNATIONAL, INC.®
amca INTERNATIONAL www.amca.org

OPTIONS:

- ❑ **BSSS** Type 304 S.S. Bird Screen.
- ❑ **BSN** No Bird Screen.
- ❑ **ISA** Aluminum Insect Screen.
- ❑ **ISSS** Type 304 S.S. Insect Screen.
- ❑ **FL15** Flanged Frame, 1 1/2" (38).
- ❑ **FL20** Flanged Frame, 2" (51).
- ❑ **ESI** Extended Sill.
- ❑ **FR1** 1" (25) Filter Rack.
- ❑ **FR2** 2" (51) Filter Rack.
- ❑ **PAC** Perimeter Anchor Clips.
- ❑ Other: _____ .

OPTIONAL FINISHES:

- ❑ **PC3** Powder Coat AAMA 2603. Color: _____ .
- ❑ **PC4** High Performance Powder Coat AAMA 2604 (Equivalent to 50% Kynar®). Color: _____ .
- ❑ **PC5** Fluoropolymer Powder Coat AAMA 2605 (Equivalent to 70% Kynar®). Color: _____ .
- ❑ **PCC** Prime Coat.
- ❑ **AN04** Clear Anodized 204-R1.
- ❑ **AN15** Clear Anodized 215-R1.

Color Anodized:

- ❑ **ANLB** Light Bronze.
- ❑ **ANMB** Medium Bronze.
- ❑ **ANDB** Dark Bronze.
- ❑ **ANBK** Black.

OPTIONAL W x H SIZING

(1/4" [6.5] Undersize standard):

- ❑ **U00** Exact Size.
- ❑ **U38** Undersize 3/8" (9.5).
- ❑ **U50** Undersize 1/2" (12.7).

SCHEDULE TYPE:	Page 1 of 3 Dimensions are in inches (mm).			
PROJECT:				
ENGINEER:	**DATE**	**B SERIES**	**SUPERSEDES**	**DRAWING NO.**
CONTRACTOR:	**10 - 22 - 26**	**1600F**	**9 - 15 - 26**	**1606WD**

Nailor Industries Inc. reserves the right to change any information concerning product or pricing without notice.

EXTRUDED ALUMINUM STATIONARY LOUVER WIND-DRIVEN RAIN RESISTANT • 6" (152) DEEP HORIZONTAL BLADE • PERFORMANCE DATA MODEL: 1606WD

Nailor Industries Inc.

FREE AREA in Square Feet and Square Meters

Height in Inches and Meters	Width in Inches and Meters																	
	12 0.30	18 0.46	24 0.61	30 0.76	36 0.91	42 1.07	48 1.22	54 1.37	60 1.52	66 1.68	72 1.83	78 1.98	84 2.13	90 2.29	96 2.44	102 2.59	108 2.74	114 2.90	120 3.05
12 0.30	**0.28** 0.03	**0.46** 0.04	**0.63** 0.06	**0.80** 0.07	**0.97** 0.09	**1.15** 0.11	**1.32** 0.12	**1.49** 0.14	**1.67** 0.15	**1.84** 0.17	**2.01** 0.19	**2.18** 0.20	**2.36** 0.22	**2.53** 0.23	**2.70** 0.25	**2.87** 0.27	**3.05** 0.28	**3.22** 0.30	**3.39** 0.32
18 0.46	**0.49** 0.05	**0.79** 0.07	**1.09** 0.10	**1.39** 0.13	**1.68** 0.16	**1.98** 0.18	**2.28** 0.21	**2.58** 0.24	**2.88** 0.27	**3.18** 0.30	**3.47** 0.32	**3.77** 0.35	**4.07** 0.38	**4.37** 0.41	**4.67** 0.43	**4.97** 0.46	**5.27** 0.49	**5.56** 0.52	**5.86** 0.54
24 0.61	**0.70** 0.06	**1.12** 0.10	**1.55** 0.14	**1.97** 0.18	**2.39** 0.22	**2.82** 0.26	**3.24** 0.30	**3.67** 0.34	**4.09** 0.38	**4.52** 0.42	**4.94** 0.46	**5.36** 0.50	**5.79** 0.54	**6.21** 0.58	**6.64** 0.62	**7.06** 0.66	**7.48** 0.70	**7.91** 0.73	**8.33** 0.77
30 0.76	**0.91** 0.08	**1.45** 0.14	**2.00** 0.19	**2.55** 0.24	**3.10** 0.29	**3.65** 0.34	**4.20** 0.39	**4.75** 0.44	**5.30** 0.49	**5.85** 0.54	**6.40** 0.59	**6.95** 0.65	**7.50** 0.70	**8.05** 0.75	**8.60** 0.80	**9.15** 0.85	**9.70** 0.90	**10.25** 0.95	**10.80** 1.00
36 0.36	**1.11** 0.10	**1.79** 0.17	**2.46** 0.23	**3.14** 0.29	**3.81** 0.35	**4.49** 0.42	**5.17** 0.48	**5.84** 0.54	**6.52** 0.61	**7.19** 0.67	**7.87** 0.73	**8.54** 0.79	**9.22** 0.86	**9.90** 0.92	**10.57** 0.98	**11.25** 1.04	**11.92** 1.11	**12.60** 1.17	**13.27** 1.23
42 1.07	**1.32** 0.12	**2.12** 0.20	**2.92** 0.27	**3.72** 0.35	**4.52** 0.42	**5.33** 0.49	**6.13** 0.57	**6.93** 0.64	**7.73** 0.72	**8.53** 0.79	**9.33** 0.87	**10.13** 0.94	**10.94** 1.02	**11.74** 1.09	**12.54** 1.16	**13.34** 1.24	**14.14** 1.31	**14.94** 1.39	**15.74** 1.46
48 1.22	**1.59** 0.15	**2.56** 0.24	**3.53** 0.33	**4.50** 0.42	**5.47** 0.51	**6.44** 0.60	**7.41** 0.69	**8.38** 0.78	**9.35** 0.87	**10.32** 0.96	**11.29** 1.05	**12.25** 1.14	**13.22** 1.23	**14.19** 1.32	**15.16** 1.41	**16.13** 1.50	**17.10** 1.59	**18.07** 1.68	**19.04** 1.77
54 1.37	**1.80** 0.17	**2.90** 0.27	**3.99** 0.37	**5.09** 0.47	**6.18** 0.57	**7.28** 0.68	**8.37** 0.78	**9.47** 0.88	**10.56** 0.98	**11.65** 1.08	**12.75** 1.18	**13.84** 1.29	**14.94** 1.39	**16.03** 1.49	**17.13** 1.59	**18.22** 1.69	**19.32** 1.79	**20.41** 1.90	**21.51** 2.00
60 1.52	**2.01** 0.19	**3.23** 0.30	**4.45** 0.41	**5.67** 0.53	**6.89** 0.64	**8.11** 0.75	**9.33** 0.87	**10.55** 0.98	**11.77** 1.09	**12.99** 1.21	**14.21** 1.32	**15.43** 1.43	**16.66** 1.55	**17.88** 1.66	**19.10** 1.77	**20.32** 1.89	**21.54** 2.00	**22.76** 2.11	**23.98** 2.23
66 1.68	**2.22** 0.21	**3.56** 0.33	**4.91** 0.46	**6.25** 0.58	**7.60** 0.71	**8.95** 0.83	**10.29** 0.96	**11.64** 1.08	**12.99** 1.21	**14.33** 1.33	**15.68** 1.46	**17.02** 1.58	**18.37** 1.71	**19.72** 1.83	**21.06** 1.96	**22.41** 2.08	**23.76** 2.21	**25.10** 2.33	**26.45** 2.46
72 1.83	**2.42** 0.23	**3.89** 0.36	**5.37** 0.50	**6.84** 0.64	**8.31** 0.77	**9.78** 0.91	**11.25** 1.05	**12.73** 1.18	**14.20** 1.32	**15.67** 1.46	**17.14** 1.59	**18.62** 1.73	**20.09** 1.87	**21.56** 2.00	**23.03** 2.14	**24.50** 2.28	**25.98** 2.41	**27.45** 2.55	**28.92** 2.69
78 1.98	**2.63** 0.24	**4.23** 0.39	**5.83** 0.54	**7.42** 0.69	**9.02** 0.84	**10.62** 0.99	**12.22** 1.13	**13.81** 1.28	**15.41** 1.43	**17.01** 1.58	**18.61** 1.73	**20.21** 1.88	**21.80** 2.03	**23.40** 2.17	**25.00** 2.32	**26.60** 2.47	**28.19** 2.62	**29.79** 2.77	**31.39** 2.92
84 2.13	**2.84** 0.26	**4.56** 0.42	**6.28** 0.58	**8.01** 0.74	**9.73** 0.90	**11.45** 1.06	**13.18** 1.22	**14.90** 1.38	**16.62** 1.54	**18.35** 1.70	**20.07** 1.86	**21.80** 2.02	**23.52** 2.18	**25.24** 2.35	**26.97** 2.51	**28.69** 2.67	**30.41** 2.83	**32.14** 2.99	**33.86** 3.15
90 2.29	**3.04** 0.28	**4.89** 0.45	**6.74** 0.63	**8.59** 0.80	**10.44** 0.97	**12.29** 1.14	**14.14** 1.31	**15.99** 1.49	**17.84** 1.66	**19.69** 1.83	**21.54** 2.00	**23.39** 2.17	**25.24** 2.34						
96 2.44	**3.25** 0.30	**5.23** 0.49	**7.20** 0.67	**9.18** 0.85	**11.15** 1.04	**13.13** 1.22	**15.10** 1.40	**17.08** 1.59	**19.05** 1.77	**21.03** 1.95	**23.00** 2.14	**24.98** 2.32	**26.95** 2.50						
102 2.59	**3.46** 0.32	**5.56** 0.52	**7.66** 0.71	**9.76** 0.91	**11.86** 1.10	**13.96** 1.30	**16.06** 1.49	**18.16** 1.69	**20.26** 1.88	**22.36** 2.08	**24.47** 2.27	**26.57** 2.47	**28.67** 2.66						
108 2.74	**3.66** 0.34	**5.89** 0.55	**8.12** 0.75	**10.34** 0.96	**12.57** 1.17	**14.80** 1.37	**17.02** 1.58	**19.25** 1.79	**21.48** 2.00	**23.70** 2.20	**25.93** 2.41	**28.16** 2.62	**30.38** 2.82						
114 2.90	**3.87** 0.36	**6.22** 0.58	**8.58** 0.80	**10.93** 1.02	**13.28** 1.23	**15.63** 1.45	**17.99** 1.67	**20.34** 1.89	**22.69** 2.11	**25.04** 2.33	**27.39** 2.54	**29.75** 2.76	**32.10** 2.98						
120 3.05	**4.15** 0.39	**6.67** 0.62	**9.19** 0.85	**11.71** 1.09	**14.23** 1.32	**16.75** 1.56	**19.27** 1.79	**21.79** 2.02	**24.31** 2.26	**26.83** 2.49	**29.35** 2.73	**31.87** 2.96	**34.39** 3.19						

amca WORLDWIDE CERTIFIED RATINGS
WATER PENETRATION
AIR PERFORMANCE
WIND DRIVEN RAIN
AIR MOVEMENT AND CONTROL ASSOCIATION INTERNATIONAL, INC.®
amca INTERNATIONAL
www.amca.org

amca INTERNATIONAL

SCHEDULE TYPE:	Page 2 of 3 Dimensions are in inches (mm).			
PROJECT:				
ENGINEER:	**DATE**	**B SERIES**	**SUPERSEDES**	**DRAWING NO.**
CONTRACTOR:	**10 - 22 - 26**	**1600F**	**9 - 15 - 26**	**1606WD**

Nailor Industries Inc. reserves the right to change any information concerning product or pricing without notice.

EXTRUDED ALUMINUM STATIONARY LOUVER WIND-DRIVEN RAIN RESISTANT • 6" (152) DEEP HORIZONTAL BLADE • PERFORMANCE DATA MODEL: 1606WD

Nailor Industries Inc.

AIRFLOW / WATER PENETRATION DATA
for 48" x 48" (1219 x 1219) Louver Size

	Free Area %	46%
	Free Area sq. ft. (sq. m.)	7.41 (0.69)
INTAKE	Free Area Velocity at Point of Beginning Water Penetration at .01 oz./sq. ft. (3 ml/sq. m) (15 min. test duration)	1250 fpm (381 m/min.)*
INTAKE	Air Volume at 1250 fpm Free Area Velocity	9,263 cfm (4372 l/s)
INTAKE	Pressure Drop @ 1250 fpm	.20 in. w.g. (50 Pa)

NOTE: To minimize water penetration when sizing intake louvers, select a Free Area Velocity that is **below** the beginning point of water penetration.*Maximum Free Area Velocity tested is 1250 fpm. Beginning point of water penetration for this model is above 1250 fpm.

WIND DRIVEN RAIN PERFORMANCE

Core Ventilation Rate in fpm (m/s)	0 (0.0)	98 (0.5)	197 (1.0)	295 (1.5)	394 (2.0)	492 (2.5)	591 (3.0)	668 (3.39)	763 (3.88)
Free Area Ventilation Rate in fpm (m/s)	0 (0.0)	209 (1.06)	419 (2.13)	628 (3.19)	838 (4.26)	1047 (5.32)	1257 (6.39)	1421 (7.22)	1623 (8.24)
Effectiveness Ratio(%)	100	99.6	99.2	98.7	98.4	98.4	98.3	97.8	97.3
Penetration Class	A	A	A	B	B	B	B	B	B

Test was based on a 39.375" x 39.375" (1.0 m x 1.0 m) core area louver tested at a rainfall rate of 3" per hour (76 mm/hour) with a wind velocity of **29 mph (13 m/s).**
DISCHARGE LOSS COEFFICIENT CLASS (INTAKE): 2. (Discharge Loss Coefficient Classification is as follows: 1=0.4 and above, 2=0.3 to 0.399, 3 = 0.2 to 0.299, 4 = 0.199 and below.)

Core Ventilation Rate in fpm (m/s)	0 (0.0)	98 (0.5)	197 (1.0)	295 (1.5)	394 (2.0)	492 (2.5)	591 (3.0)	668 (3.39)	763 (3.88)
Free Area Ventilation Rate in fpm (m/s)	0 (0.0)	209 (1.06)	419 (2.13)	628 (3.19)	838 (4.26)	1047 (5.32)	1257 (6.39)	1421 (7.22)	1623 (8.24)
Effectiveness Ratio(%)	100	99.5	99.4	99.2	98.6	98.7	98.4	97.9	97.4
Penetration Class	A	A	A	A	B	B	B	B	B

Test was based on a 39.375" x 39.375" (1.0 m x 1.0 m) core area louver tested at a rainfall rate of 8" per hour (203 mm/hour) with a wind velocity of **50 mph (22 m/s).**
DISCHARGE LOSS COEFFICIENT CLASS (INTAKE): 2. (Discharge Loss Coefficient Classification is as follows: 1=0.4 and above, 2=0.3 to 0.399, 3 = 0.2 to 0.299, 4 = 0.199 and below.)

PRESSURE DROP

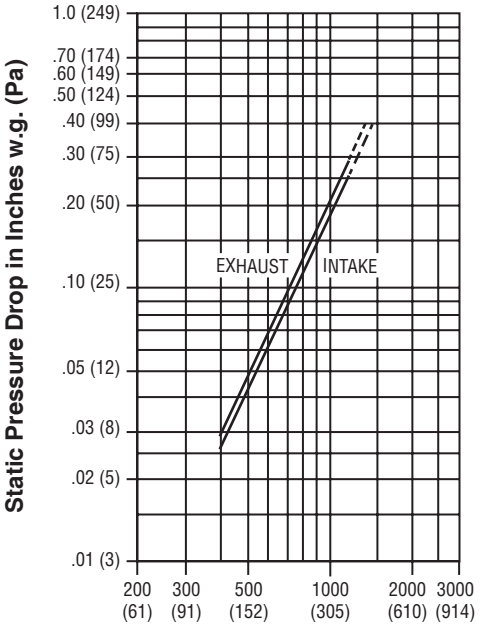

Air Velocity in Feet (Meters) Per Minute Through Free Area

Louver test size: 48" x 48" (1219 x 1219 mm).
Standard air density @ 0.075 lbs/ft³.
Tested to AMCA Fig. 5.5 – 6.5.

amca WORLDWIDE CERTIFIED RATINGS — WATER PENETRATION — AIR PERFORMANCE — WIND DRIVEN RAIN — AIR MOVEMENT AND CONTROL ASSOCIATION INTERNATIONAL, INC.®
amca INTERNATIONAL www.amca.org

Nailor Industries Inc. certifies that the Model 1606WD shown herein is licensed to bear the AMCA Certified Ratings Program seal. The ratings shown are based on tests and procedures performed in accordance with AMCA Publication 511 and comply with the requirements of the AMCA Certified Ratings Program. The AMCA Certified Ratings Program seal applies to air performance, water penetration and wind driven rain performance ratings.

Louvers were tested in accordance with AMCA Standard 500-L.

SCHEDULE TYPE:	Page 3 of 3 Dimensions are in inches (mm).			
PROJECT:				
ENGINEER:	DATE	B SERIES	SUPERSEDES	DRAWING NO.
CONTRACTOR:	10 - 22- 26	1600F	9 - 15 - 26	1606WD

Nailor Industries Inc. reserves the right to change any information concerning product or pricing without notice.

EXTRUDED ALUMINUM STATIONARY LOUVER
FLORIDA PRODUCT APPROVED
WIND-DRIVEN RAIN RESISTANT
6" (152) DEEP • HORIZONTAL BLADE
MODEL: 1606WDF

Nailor Industries Inc.

Intertek

QUALIFICATIONS:

- **Florida Product Approval No. : 19273.5**
- **Intertek Listed Building Product: Exterior Louvers.**
- **Tested in accordance with: TAS-201 (Large Missile Impact Test), TAS-202 (Uniform Static Air Pressure Test), TAS-203 (Cyclic Wind Pressure Loading Test).**
- **AMCA 500-L (Wind-Driven Rain, Water Penetration, Airflow).**
- **AMCA 540 (Wind-Borne Debris Impact Test [Enhanced "Level E" Protection]).**
- **Wind load rating +/– 50 PSF (standard) (up to +/– 150 PSF dependent on size & configuration).**

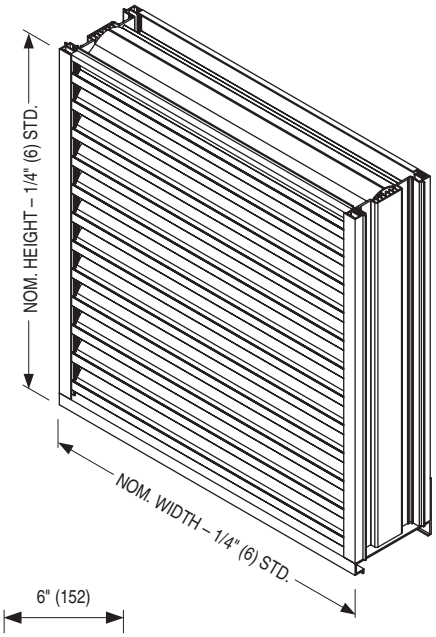

STANDARD CONSTRUCTION:

FRAME:	6" (152) deep, Type 6063-T6 extruded aluminum, .080" (2.03) nominal wall thickness. Integral downspouts and caulking slot provided.
BLADES:	Type 6063-T6 extruded aluminum, .080" (2.03) nominal wall thickness, with reinforcing bosses.
BLADE ANGLE:	Fixed at 30 degrees.
BLADE SPACING:	1.94" (49) on centers.
BLADE SUPPORT:	Concealed type, factory installed on rear of louver. Size varies based on design pressure. Consult Nailor.
SCREEN:	5/8" x .050 (15.9 x 1.27) expanded, flattened aluminum bird screen in removable frame, inside (rear) mount (adds approx. 3/8" [10] to louver depth).
FINISH:	Mill.
MINIMUM SIZE:	12" W x 12" H (305 x 305).
MAX. SINGLE SECTION SIZE:	108" W x 84" H (2743 x 2134) or 84" W x 120" H (2134 x 3048). 63 – 70 sq. ft. (5.9 – 6.5 m^2). Larger louvers will require field assembly of smaller sections.
OVERALL MAXIMUM SIZE:	Unlimited Width x 120" H (3048).

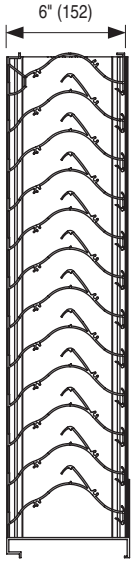

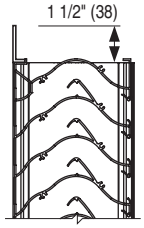

OPT. FLANGED FRAME (FL15 STD.)

OPTIONS:

- ❑ BSSS Type 304 S.S. Bird Screen.
- ❑ BSN No Bird Screen.
- ❑ ISA Aluminum Insect Screen.
- ❑ ISSS Type 304 S.S. Insect Screen.
- ❑ FL15 Flanged Frame, 1 1/2" (38).
- ❑ FL20 Flanged Frame, 2" (51).
- ❑ ESI Extended Sill.
- ❑ PASI Sill Pan.
- ❑ Other: _____ .

OPTIONAL FINISHES:

- ❑ PC3 Powder Coat AAMA 2603. Color: _____ .
- ❑ PC4 High Performance Powder Coat AAMA 2604 (Equivalent to 50% Kynar®). Color: _____ .
- ❑ PC5 Fluoropolymer Powder Coat AAMA 2605 (Equivalent to 70% Kynar®). Color: _____ .
- ❑ PCC Prime Coat.
- ❑ AN04 Clear Anodized 204-R1.
- ❑ AN15 Clear Anodized 215-R1.
- ❑ ANLB Light Bronze.
- ❑ ANMB Medium Bronze.
- ❑ ANDB Dark Bronze.
- ❑ ANBK Black.

For Installation Instructions, see IOM-LOUVERINSTFPA.

SCHEDULE TYPE:	Page 1 of 3 Dimensions are in inches (mm).			
PROJECT:				
ENGINEER:	**DATE**	**B SERIES**	**SUPERSEDES**	**DRAWING NO.**
CONTRACTOR:	**10 - 22 - 26**	**1600F**	**9 - 15 - 26**	**1606WDF**

Nailor Industries Inc. reserves the right to change any information concerning product or pricing without notice.

Nailor® Industries Inc.

EXTRUDED ALUMINUM STATIONARY LOUVER
FLORIDA PRODUCT APPROVED
WIND-DRIVEN RAIN RESISTANT • 6" (152) DEEP
HORIZONTAL BLADE • PERFORMANCE DATA
MODEL: 1606WDF

Intertek

FREE AREA in Square Feet and Square Meters

Height in Inches and Meters	Width in Inches and Meters																		
	12 0.30	18 0.46	24 0.61	30 0.76	36 0.91	42 1.07	48 1.22	54 1.37	60 1.52	66 1.68	72 1.83	78 1.98	84 2.13	90 2.29	96 2.44	102 2.59	108 2.74	114 2.90	120 3.05
12 0.30	**0.28** 0.03	**0.46** 0.04	**0.63** 0.06	**0.80** 0.07	**0.97** 0.09	**1.15** 0.11	**1.32** 0.12	**1.49** 0.14	**1.67** 0.15	**1.84** 0.17	**2.01** 0.19	**2.18** 0.20	**2.36** 0.22	**2.53** 0.23	**2.70** 0.25	**2.87** 0.27	**3.05** 0.28	**3.22** 0.30	**3.39** 0.32
18 0.46	**0.49** 0.05	**0.79** 0.07	**1.09** 0.10	**1.39** 0.13	**1.68** 0.16	**1.98** 0.18	**2.28** 0.21	**2.58** 0.24	**2.88** 0.27	**3.18** 0.30	**3.47** 0.32	**3.77** 0.35	**4.07** 0.38	**4.37** 0.41	**4.67** 0.43	**4.97** 0.46	**5.27** 0.49	**5.56** 0.52	**5.86** 0.54
24 0.61	**0.70** 0.06	**1.12** 0.10	**1.55** 0.14	**1.97** 0.18	**2.39** 0.22	**2.82** 0.26	**3.24** 0.30	**3.67** 0.34	**4.09** 0.38	**4.52** 0.42	**4.94** 0.46	**5.36** 0.50	**5.79** 0.54	**6.21** 0.58	**6.64** 0.62	**7.06** 0.66	**7.48** 0.70	**7.91** 0.73	**8.33** 0.77
30 0.76	**0.91** 0.08	**1.45** 0.14	**2.00** 0.19	**2.55** 0.24	**3.10** 0.29	**3.65** 0.34	**4.20** 0.39	**4.75** 0.44	**5.30** 0.49	**5.85** 0.54	**6.40** 0.59	**6.95** 0.65	**7.50** 0.70	**8.05** 0.75	**8.60** 0.80	**9.15** 0.85	**9.70** 0.90	**10.25** 0.95	**10.80** 1.00
36 0.36	**1.11** 0.10	**1.79** 0.17	**2.46** 0.23	**3.14** 0.29	**3.81** 0.35	**4.49** 0.42	**5.17** 0.48	**5.84** 0.54	**6.52** 0.61	**7.19** 0.67	**7.87** 0.73	**8.54** 0.79	**9.22** 0.86	**9.90** 0.92	**10.57** 0.98	**11.25** 1.04	**11.92** 1.11	**12.60** 1.17	**13.27** 1.23
42 1.07	**1.32** 0.12	**2.12** 0.20	**2.92** 0.27	**3.72** 0.35	**4.52** 0.42	**5.33** 0.49	**6.13** 0.57	**6.93** 0.64	**7.73** 0.72	**8.53** 0.79	**9.33** 0.87	**10.13** 0.94	**10.94** 1.02	**11.74** 1.09	**12.54** 1.16	**13.34** 1.24	**14.14** 1.31	**14.94** 1.39	**15.74** 1.46
48 1.22	**1.59** 0.15	**2.56** 0.24	**3.53** 0.33	**4.50** 0.42	**5.47** 0.51	**6.44** 0.60	**7.41** 0.69	**8.38** 0.78	**9.35** 0.87	**10.32** 0.96	**11.29** 1.05	**12.25** 1.14	**13.22** 1.23	**14.19** 1.32	**15.16** 1.41	**16.13** 1.50	**17.10** 1.59	**18.07** 1.68	**19.04** 1.77
54 1.37	**1.80** 0.17	**2.90** 0.27	**3.99** 0.37	**5.09** 0.47	**6.18** 0.57	**7.28** 0.68	**8.37** 0.78	**9.47** 0.88	**10.56** 0.98	**11.65** 1.08	**12.75** 1.18	**13.84** 1.29	**14.94** 1.39	**16.03** 1.49	**17.13** 1.59	**18.22** 1.69	**19.32** 1.79	**20.41** 1.90	**21.51** 2.00
60 1.52	**2.01** 0.19	**3.23** 0.30	**4.45** 0.41	**5.67** 0.53	**6.89** 0.64	**8.11** 0.75	**9.33** 0.87	**10.55** 0.98	**11.77** 1.09	**12.99** 1.21	**14.21** 1.32	**15.43** 1.43	**16.66** 1.55	**17.88** 1.66	**19.10** 1.77	**20.32** 1.89	**21.54** 2.00	**22.76** 2.11	**23.98** 2.23
66 1.68	**2.22** 0.21	**3.56** 0.33	**4.91** 0.46	**6.25** 0.58	**7.60** 0.71	**8.95** 0.83	**10.29** 0.96	**11.64** 1.08	**12.99** 1.21	**14.33** 1.33	**15.68** 1.46	**17.02** 1.58	**18.37** 1.71	**19.72** 1.83	**21.06** 1.96	**22.41** 2.08	**23.76** 2.21	**25.10** 2.33	**26.45** 2.46
72 1.83	**2.42** 0.23	**3.89** 0.36	**5.37** 0.50	**6.84** 0.64	**8.31** 0.77	**9.78** 0.91	**11.25** 1.05	**12.73** 1.18	**14.20** 1.32	**15.67** 1.46	**17.14** 1.59	**18.62** 1.73	**20.09** 1.87	**21.56** 2.00	**23.03** 2.14	**24.50** 2.28	**25.98** 2.41	**27.45** 2.55	**28.92** 2.69
78 1.98	**2.63** 0.24	**4.23** 0.39	**5.83** 0.54	**7.42** 0.69	**9.02** 0.84	**10.62** 0.99	**12.22** 1.13	**13.81** 1.28	**15.41** 1.43	**17.01** 1.58	**18.61** 1.73	**20.21** 1.88	**21.80** 2.03	**23.40** 2.17	**25.00** 2.32	**26.60** 2.47	**28.19** 2.62	**29.79** 2.77	**31.39** 2.92
84 2.13	**2.84** 0.26	**4.56** 0.42	**6.28** 0.58	**8.01** 0.74	**9.73** 0.90	**11.45** 1.06	**13.18** 1.22	**14.90** 1.38	**16.62** 1.54	**18.35** 1.70	**20.07** 1.86	**21.80** 2.02	**23.52** 2.18	**25.24** 2.35	**26.97** 2.51	**28.69** 2.67	**30.41** 2.83	**32.14** 2.99	**33.86** 3.15
90 2.29	**3.04** 0.28	**4.89** 0.45	**6.74** 0.63	**8.59** 0.80	**10.44** 0.97	**12.29** 1.14	**14.14** 1.31	**15.99** 1.49	**17.84** 1.66	**19.69** 1.83	**21.54** 2.00	**23.39** 2.17	**25.24** 2.34						
96 2.44	**3.25** 0.30	**5.23** 0.49	**7.20** 0.67	**9.18** 0.85	**11.15** 1.04	**13.13** 1.22	**15.10** 1.40	**17.08** 1.59	**19.05** 1.77	**21.03** 1.95	**23.00** 2.14	**24.98** 2.32	**26.95** 2.50						
102 2.59	**3.46** 0.32	**5.56** 0.52	**7.66** 0.71	**9.76** 0.91	**11.86** 1.10	**13.96** 1.30	**16.06** 1.49	**18.16** 1.69	**20.26** 1.88	**22.36** 2.08	**24.47** 2.27	**26.57** 2.47	**28.67** 2.66						
108 2.74	**3.66** 0.34	**5.89** 0.55	**8.12** 0.75	**10.34** 0.96	**12.57** 1.17	**14.80** 1.37	**17.02** 1.58	**19.25** 1.79	**21.48** 2.00	**23.70** 2.20	**25.93** 2.41	**28.16** 2.62	**30.38** 2.82						
114 2.90	**3.87** 0.36	**6.22** 0.58	**8.58** 0.80	**10.93** 1.02	**13.28** 1.23	**15.63** 1.45	**17.99** 1.67	**20.34** 1.89	**22.69** 2.11	**25.04** 2.33	**27.39** 2.54	**29.75** 2.76	**32.10** 2.98						
120 3.05	**4.15** 0.39	**6.67** 0.62	**9.19** 0.85	**11.71** 1.09	**14.23** 1.32	**16.75** 1.56	**19.27** 1.79	**21.79** 2.02	**24.31** 2.26	**26.83** 2.49	**29.35** 2.73	**31.87** 2.96	**34.39** 3.19						

SCHEDULE TYPE:	Page 2 of 3 Dimensions are in inches (mm).			
PROJECT:				
ENGINEER:	**DATE**	**B SERIES**	**SUPERSEDES**	**DRAWING NO.**
CONTRACTOR:	**10 - 22 - 26**	**1600F**	**9 - 15 - 26**	**1606WDF**

Nailor Industries Inc. reserves the right to change any information concerning product or pricing without notice.

EXTRUDED ALUMINUM STATIONARY LOUVER
FLORIDA PRODUCT APPROVED
WIND-DRIVEN RAIN RESISTANT • 6" (152) DEEP
HORIZONTAL BLADE • PERFORMANCE DATA
MODEL: 1606WDF

Nailor Industries Inc.

Intertek

AIRFLOW/WATER PENETRATION DATA
for 48" x 48" (1219 x 1219) Louver Size

	Free Area %	46%
	Free Area sq. ft. (sq. m.)	7.41 (0.69)
INTAKE	Free Area Velocity at Point of Beginning Water Penetration at .01 oz./sq. ft. (3 ml/sq. m) (15 min. test duration)	1250 fpm (381 m/min.)*
	Air Volume at 1250 fpm Free Area Velocity	9,263 cfm (4372 l/s)
	Pressure Drop @ 1250 fpm	.20 in. w.g. (50 Pa)

NOTE: To minimize water penetration when sizing intake louvers, select a Free Area Velocity that is **below** the beginning point of water penetration.*Maximum Free Area Velocity tested is 1250 fpm. Beginning point of water penetration for this model is above 1250 fpm.

WIND DRIVEN RAIN PERFORMANCE

Core Ventilation Rate in fpm (m/s)	0 (0.0)	98 (0.5)	197 (1.0)	295 (1.5)	394 (2.0)	492 (2.5)	591 (3.0)	668 (3.39)	763 (3.88)
Free Area Ventilation Rate in fpm (m/s)	0 (0.0)	209 (1.06)	419 (2.13)	628 (3.19)	838 (4.26)	1047 (5.32)	1257 (6.39)	1421 (7.22)	1623 (8.24)
EffectivenessRatio(%)	100	99.6	99.2	98.7	98.4	98.4	98.3	97.8	97.3
Penetration Class	A	A	A	B	B	B	B	B	B

Test was based on a 39.375" x 39.375" (1.0 m x 1.0 m) core area louver tested at a rainfall rate of 3" per hour (76 mm/hour) with a wind velocity of **29 mph (13 m/s).**
DISCHARGE LOSS COEFFICIENT CLASS (INTAKE): 2. (Discharge Loss Coefficient Classification is as follows: 1=0.4 and above, 2=0.3 to 0.399, 3 = 0.2 to 0.299, 4 = 0.199 and below.)

Core Ventilation Rate in fpm (m/s)	0 (0.0)	98 (0.5)	197 (1.0)	295 (1.5)	394 (2.0)	492 (2.5)	591 (3.0)	668 (3.39)	763 (3.88)
Free Area Ventilation Rate in fpm (m/s)	0 (0.0)	209 (1.06)	419 (2.13)	628 (3.19)	838 (4.26)	1047 (5.32)	1257 (6.39)	1421 (7.22)	1623 (8.24)
EffectivenessRatio(%)	100	99.5	99.4	99.2	98.6	98.7	98.4	97.9	97.4
Penetration Class	A	A	A	A	B	B	B	B	B

Test was based on a 39.375" x 39.375" (1.0 m x 1.0 m) core area louver tested at a rainfall rate of 8" per hour (203 mm/hour) with a wind velocity of **50 mph (22 m/s).**
DISCHARGE LOSS COEFFICIENT CLASS (INTAKE): 2. (Discharge Loss Coefficient Classification is as follows: 1=0.4 and above, 2=0.3 to 0.399, 3 = 0.2 to 0.299, 4 = 0.199 and below.)

PRESSURE DROP

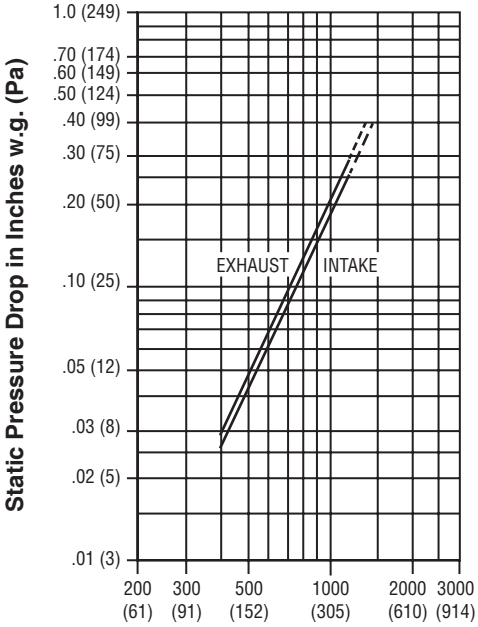

Air Velocity in Feet (Meters) Per Minute Through Free Area

Louver test size: 48" x 48" (1219 x 1219 mm).
Standard air density @ 0.075 lbs/ft³.
Tested to AMCA Fig. 5.5 – 6.5.

amca WORLDWIDE CERTIFIED RATINGS — WATER PENETRATION — AIR PERFORMANCE — WIND DRIVEN RAIN — AIR MOVEMENT AND CONTROL ASSOCIATION INTERNATIONAL, INC.®
amca INTERNATIONAL www.amca.org

Nailor Industries Inc. certifies that the Model 1606WDF shown herein is licensed to bear the AMCA Certified Ratings Program seal. The ratings shown are based on tests and procedures performed in accordance with AMCA Publication 511 and comply with the requirements of the AMCA Certified Ratings Program. The AMCA Certified Ratings Program seal applies to air performance, water penetration and wind driven rain performance ratings.

Louvers were tested in accordance with AMCA Standard 500-L.

amca INTERNATIONAL LISTED — 540 IMPACT RESISTANT LOUVER *Enhanced Protection Level E* — *See www.AMCA.org for all certified or listed products* — This label does not signify AMCA airflow performance certification.

Nailor Industries Inc. certifies that the 1606WDF shown herein is approved to bear the AMCA International Listing Label. The ratings shown are based on tests and procedures performed in accordance with AMCA publications and comply with the requirements of the AMCA International Listing Label program. The AMCA International Listing Label applies to pressure cycle tested wind-borne debris impact resistant louvers rated for "Enhanced Protection" and +/- 50PSF with a minimum blade span of less than 12 in. (305mm) and a maximum unsupported blade span of 52 in. (1321 mm).

SCHEDULE TYPE:	Page 3 of 3 Dimensions are in inches (mm).			
PROJECT:				
ENGINEER:	**DATE**	**B SERIES**	**SUPERSEDES**	**DRAWING NO.**
CONTRACTOR:	**10 - 22 - 26**	**1600F**	**9 - 15 - 26**	**1606WDF**

Nailor Industries Inc. reserves the right to change any information concerning product or pricing without notice.

EXTRUDED ALUMINUM STATIONARY HYBRID LOUVER HIGH VELOCITY WIND-DRIVEN RAIN AND IMPACT RESISTANT 9" (229) DEEP • HORIZONTAL AND VERTICAL BLADE MODEL: 1609H

Nailor Industries Inc.

QUALIFICATIONS:

- **AMCA 500-L (Wind-Driven Rain, Water Penetration, Air Performance).**
- **AMCA 540 (Wind-Borne Debris Impact Test [Enhanced "Level E" Protection]).**
- **AMCA 550 (High Velocity Wind-Driven Rain Resistance Test).**
- **Wind load rating +/– 70 PSF.**

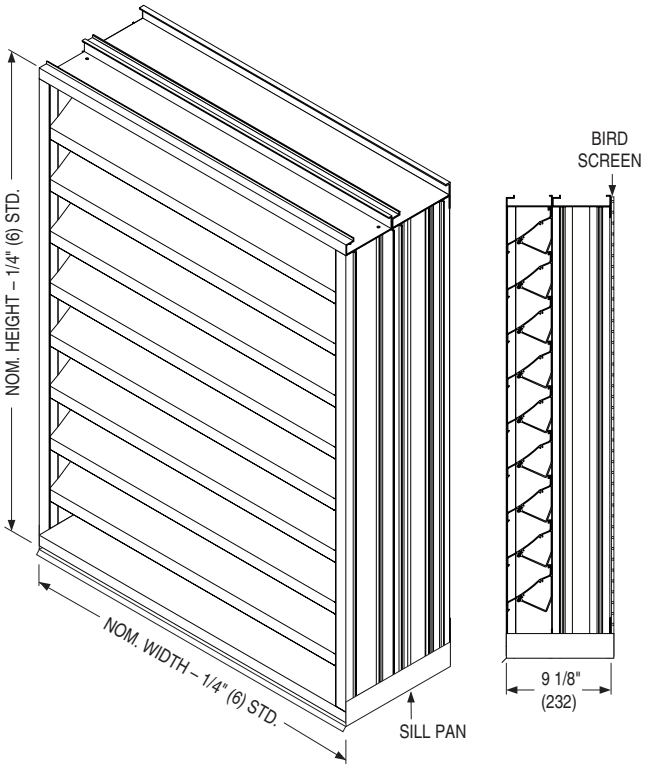

STANDARD CONSTRUCTION:

FRAME: **Front:** 4" (102) deep, Type 6063-T6 extruded aluminum, .080" (2.03) nominal wall thickness. Integral caulking slot provided.
Rear: 5" (127) deep, Type 6063-T6 extruded aluminum, .080" (2.03) nominal wall thickness. Integral downspouts provided.

BLADES: **Front:** Horizontal Type 6063-T6 extruded aluminum, .080" (2.03) nominal wall thickness, with reinforcing bosses. J style. Fixed at 37 degrees.
Rear: Vertical Type 6063-T6 extruded aluminum, .060" (1.52) nominal wall thickness, with reinforcing bosses.

BLADE SPACING: **Front:** Approximately 4" (102) on centers.
Rear: Approximately 1 1/2" (38) on centers.

BLADE SUPPORT **Front:** Concealed type, factory installed on rear of louver on maximum 60" (1524) centers.
Rear: 2.5" (64) strap every 60" (1524) or less in height.

SCREEN: 3/4" x .050 (19 x 1.3) expanded, flattened aluminum bird screen in removable frame, inside (rear) mount (adds approximately 3/8" [10] to louver depth).

SILL PAN: Aluminum sill pan with end dams. (louver width undersized an additional 1/4" (6) to accommodate sill pan).

FINISH: Mill.

MINIMUM SIZE: 12" W x 12" H (305 x 305).

MAX. SINGLE SECTION SIZE: 60" W x 120" H (1524 x 3048). 50 sq. ft. (4.6 m^2). Larger louvers will require field assembly of smaller sections.

MAXIMUM SIZE: Unlimited Width x 120" H (3048).

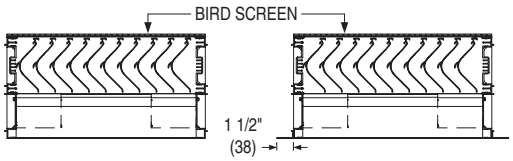

OPT. FLANGED FRAME (FL15 STD.)

amca WORLDWIDE CERTIFIED RATINGS — WATER PENETRATION, AIR PERFORMANCE, WIND DRIVEN RAIN — AIR MOVEMENT AND CONTROL ASSOCIATION INTERNATIONAL, INC. www.amca.org

amca INTERNATIONAL LISTED — HIGH VELOCITY RAIN RESISTANT WITH BLADES FULLY OPEN AND IMPACT RESISTANT LOUVER *Enhanced Protection Level E* — See www.AMCA.org for all certified or listed products — This label does not signify AMCA airflow performance certification.

OPTIONS:

- ❑ **BSSS** Type 304 S.S. Bird Screen.
- ❑ **BSN** No Bird Screen.
- ❑ **ISSS** Type 304 S.S. Insect Screen.
- ❑ **ISA** Aluminum Insect Screen.
- ❑ **FL15** Flanged Frame, 1 1/2" (38).
- ❑ **FL20** Flanged Frame, 2" (51).
- ❑ **PAAA** Perimeter Anchor Angles (Aluminum, Continuous).
- ❑ Other: _____ .

OPTIONAL FINISHES:

- ❑ **PC3** Powder Coat AAMA 2603. Color: _____ .
- ❑ **PC4** High Performance Powder Coat AAMA 2604 (Equivalent to 50% Kynar®). Color: _____ .
- ❑ **PC5** Fluoropolymer Powder Coat AAMA 2605 (Equivalent to 70% Kynar®). Color: _____ .
- ❑ **PCC** Prime Coat.
- ❑ **AN04** Clear Anodized 204-R1.
- ❑ **AN15** Clear Anodized 215-R1.
- ❑ **ANLB** Light Bronze.
- ❑ **ANMB** Medium Bronze.
- ❑ **ANDB** Dark Bronze.
- ❑ **ANBK** Black.

SCHEDULE TYPE:

PROJECT:

ENGINEER:

CONTRACTOR:

Dimensions are in inches (mm).

DATE	B SERIES	SUPERSEDES	DRAWING NO.
5 - 28 - 25	1600M	7 - 6 - 21	1609H

Nailor Industries Inc. reserves the right to change any information concerning product or pricing without notice.

Nailor® Industries Inc.

EXTRUDED ALUMINUM STATIONARY HYBRID LOUVER
HIGH VELOCITY WIND-DRIVEN RAIN AND IMPACT RESISTANT
9" (229) DEEP • HORIZONTAL AND VERTICAL BLADE
PERFORMANCE DATA
MODEL: 1609H

FREE AREA in Square Feet and Square Meters

Height in Inches and Meters	Width in Inches and Meters								
	12 0.30	**18** 0.46	**24** 0.61	**30** 0.76	**36** 0.91	**42** 1.07	**48** 1.22	**54** 1.37	**60** 1.52
12 0.30	**0.21** 0.02	**0.39** 0.04	**0.56** 0.05	**0.73** 0.07	**0.90** 0.08	**1.07** 0.10	**1.24** 0.12	**1.41** 0.13	**1.58** 0.15
18 0.46	**0.42** 0.04	**0.76** 0.07	**1.10** 0.10	**1.44** 0.13	**1.78** 0.17	**2.12** 0.20	**2.46** 0.23	**2.80** 0.26	**3.13** 0.29
24 0.61	**0.63** 0.06	**1.14** 0.11	**1.65** 0.15	**2.15** 0.20	**2.66** 0.25	**3.17** 0.29	**3.67** 0.34	**4.18** 0.39	**4.69** 0.44
30 0.76	**0.84** 0.08	**1.52** 0.14	**2.19** 0.20	**2.87** 0.27	**3.54** 0.33	**4.21** 0.39	**4.89** 0.45	**5.56** 0.52	**6.24** 0.58
36 0.36	**1.05** 0.10	**1.89** 0.18	**2.74** 0.25	**3.58** 0.33	**4.42** 0.41	**5.26** 0.49	**6.10** 0.57	**6.95** 0.65	**7.79** 0.72
42 1.07	**1.26** 0.12	**2.27** 0.21	**3.28** 0.30	**4.29** 0.40	**5.30** 0.49	**6.31** 0.59	**7.32** 0.68	**8.33** 0.77	**9.34** 0.87
48 1.22	**1.47** 0.14	**2.65** 0.25	**3.83** 0.36	**5.00** 0.46	**6.18** 0.57	**7.36** 0.68	**8.53** 0.79	**9.71** 0.90	**10.89** 1.01
54 1.37	**1.68** 0.16	**3.03** 0.28	**4.37** 0.41	**5.72** 0.53	**7.06** 0.66	**8.41** 0.78	**9.75** 0.91	**11.09** 1.03	**12.44** 1.16
60 1.52	**1.89** 0.18	**3.40** 0.32	**4.92** 0.46	**6.43** 0.60	**7.94** 0.74	**9.45** 0.88	**10.97** 1.02	**12.48** 1.16	**13.99** 1.30
66 1.68	**2.10** 0.20	**3.78** 0.35	**5.46** 0.51	**7.14** 0.66	**8.82** 0.82	**10.50** 0.98	**12.18** 1.13	**13.86** 1.29	**15.54** 1.44
72 1.83	**2.31** 0.21	**4.16** 0.39	**6.01** 0.56	**7.85** 0.73	**9.70** 0.90	**11.55** 1.07	**13.40** 1.24	**15.24** 1.42	**17.09** 1.59
78 1.98	**2.52** 0.23	**4.53** 0.42	**6.55** 0.61	**8.57** 0.80	**10.58** 0.98	**12.60** 1.17	**14.61** 1.36	**16.63** 1.54	**18.64** 1.73
84 2.13	**2.73** 0.25	**4.91** 0.46	**7.10** 0.66	**9.28** 0.86	**11.46** 1.06	**13.64** 1.27	**15.83** 1.47	**18.01** 1.67	**20.19** 1.88
90 2.29	**2.94** 0.27	**5.29** 0.49	**7.64** 0.71	**9.99** 0.93	**12.34** 1.15	**14.69** 1.36	**17.04** 1.58	**19.39** 1.80	**21.75** 2.02
96 2.44	**3.15** 0.29	**5.67** 0.53	**8.19** 0.76	**10.70** 0.99	**13.22** 1.23	**15.74** 1.46	**18.26** 1.70	**20.78** 1.93	**23.30** 2.16
102 2.59	**3.36** 0.31	**6.04** 0.56	**8.73** 0.81	**11.42** 1.06	**14.10** 1.31	**16.79** 1.56	**19.47** 1.81	**22.16** 2.06	**24.85** 2.31
108 2.74	**3.57** 0.33	**6.42** 0.60	**9.27** 0.86	**12.13** 1.13	**14.98** 1.39	**17.84** 1.66	**20.69** 1.92	**23.54** 2.19	**26.40** 2.45
114 2.90	**3.78** 0.35	**6.80** 0.63	**9.82** 0.91	**12.84** 1.19	**15.86** 1.47	**18.88** 1.75	**21.91** 2.04	**24.93** 2.32	**27.95** 2.60
120 3.05	**3.99** 0.37	**7.18** 0.67	**10.36** 0.96	**13.55** 1.26	**16.74** 1.56	**19.93** 1.85	**23.12** 2.15	**26.31** 2.44	**29.50** 2.74

amca WORLDWIDE CERTIFIED RATINGS — WATER PENETRATION, AIR PERFORMANCE, WIND DRIVEN RAIN — AIR MOVEMENT AND CONTROL ASSOCIATION INTERNATIONAL, INC. www.amca.org

amca INTERNATIONAL LISTED — HIGH VELOCITY RAIN RESISTANT WITH BLADES FULLY OPEN AND IMPACT RESISTANT LOUVER *Enhanced Protection Level E* — See www.AMCA.org for all certified or listed products. This label does not signify AMCA airflow performance certification.

SCHEDULE TYPE:	Page 2 of 3 Dimensions are in inches (mm).			
PROJECT:				
ENGINEER:	**DATE**	**B SERIES**	**SUPERSEDES**	**DRAWING NO.**
CONTRACTOR:	**5 - 28 - 25**	**1600M**	**7 - 6 - 21**	**1609H**

Nailor Industries Inc. reserves the right to change any information concerning product or pricing without notice.

Nailor® Industries Inc.

EXTRUDED ALUMINUM STATIONARY HYBRID LOUVER HIGH VELOCITY WIND-DRIVEN RAIN AND IMPACT RESISTANT 9" (229) DEEP • HORIZONTAL AND VERTICAL BLADE PERFORMANCE DATA MODEL: 1609H

AIRFLOW / WATER PENETRATION DATA
for 48" x 48" (1219 x 1219) Louver Size

Free Area %		53%
Free Area sq. ft. (sq. m.)		8.53 (0.79)
INTAKE	Free Area Velocity at Point of Beginning Water Penetration at .01 oz./sq. ft. (3 ml/sq. m) (15 min. test duration)	1011 fpm (308 m/min.)
INTAKE	Air Volume at 1011 fpm Free Area Velocity	8,624 cfm (4070 l/s)
INTAKE	Pressure Drop @ 1011 fpm	.34 in. w.g. (85 Pa)

NOTE: To minimize water penetration when sizing intake louvers, select a Free Area Velocity that is **below** the beginning point of water penetration.

WIND DRIVEN RAIN PERFORMANCE

Core Ventilation Rate in fpm (m/s)	0 (0.00)	99 (0.50)	198 (1.01)	297 (1.51)	393 (2.00)	494 (2.51)	590 (3.00)	690 (3.51)	789 (4.01)	889 (4.52)	985 (5.00)
Free Area Ventilation Rate in fpm (m/s)	0 (0.00)	187 (0.95)	374 (1.90)	560 (2.84)	742 (3.77)	932 (4.73)	1113 (5.65)	1302 (6.61)	1489 (7.56)	1677 (8.52)	1858 (9.44)
Effectiveness Ratio (%)	100	100	100	100	100	100	100	100	100	100	99.9
Penetration Class	A	A	A	A	A	A	A	A	A	A	A

Test was based on a 39.375" x 39.375" (1.0 m x 1.0 m) core area louver tested at a rainfall rate of 3" per hour (76 mm/hour) with a wind velocity of **29 mph (13 m/s).**
DISCHARGE LOSS COEFFICIENT CLASS (INTAKE): 3. (Discharge Loss Coefficient Classification is as follows: 1=0.4 and above, 2=0.3 to 0.399, 3 = 0.2 to 0.299, 4 = 0.199 and below.)

Core Ventilation Rate in fpm (m/s)	0 (0.00)	96 (0.49)	197 (1.00)	288 (1.46)	396 (2.01)	482 (2.45)	593 (3.01)	691 (3.51)	793 (4.03)	894 (4.54)	988 (5.02)
Free Area Ventilation Rate in fpm (m/s)	0 (0.00)	181 (0.92)	372 (1.89)	543 (2.76)	747 (3.79)	909 (4.62)	1119 (5.68)	1304 (6.62)	1496 (7.60)	1687 (8.57)	1864 (9.47)
Effectiveness Ratio (%)	100	100	100	100	100	100	99.8	99.6	99.1	98.5	97.9
Penetration Class	A	A	A	A	A	A	A	A	A	B	B

Test was based on a 39.375" x 39.375" (1.0 m x 1.0 m) core area louver tested at a rainfall rate of 8" per hour (203 mm/hour) with a wind velocity of **50 mph (22 m/s).**
DISCHARGE LOSS COEFFICIENT CLASS (INTAKE): 3. (Discharge Loss Coefficient Classification is as follows: 1=0.4 and above, 2=0.3 to 0.399, 3 = 0.2 to 0.299, 4 = 0.199 and below.)

PRESSURE DROP

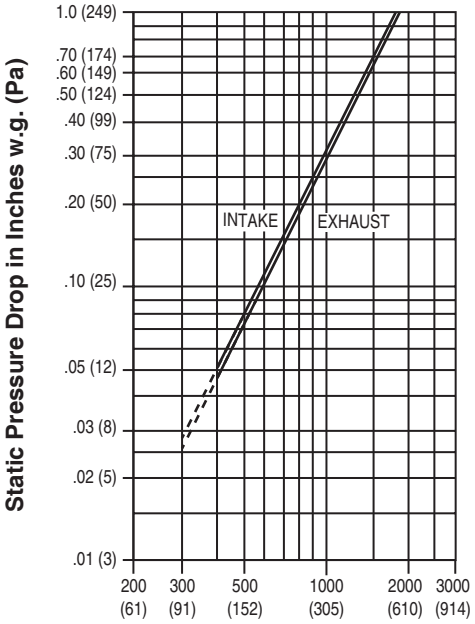

Air Velocity in Feet (Meters) Per Minute Through Free Area

Louver test size: 48" x 48" (1219 x 1219 mm).
Standard air density @ 0.075 lbs/ft³.
Tested to AMCA Fig. 5.5 – 6.5.

amca WORLDWIDE CERTIFIED RATINGS — WATER PENETRATION, AIR PERFORMANCE, WIND DRIVEN RAIN — AIR MOVEMENT AND CONTROL ASSOCIATION INTERNATIONAL, INC.® www.amca.org

Nailor Industries Inc. certifies that the Model 1609H shown herein is licensed to bear the AMCA Certified Ratings Program seal. The ratings shown are based on tests and procedures performed in accordance with AMCA Publication 511 and comply with the requirements of the AMCA Certified Ratings Program. The AMCA Certified Ratings Program seal applies to Water Penetration, Wind Driven Rain, and Air Performance ratings.

Louvers were tested in accordance with AMCA Standard 500-L.

amca INTERNATIONAL LISTED

HIGH VELOCITY RAIN RESISTANT WITH BLADES FULLY OPEN AND IMPACT RESISTANT LOUVER
Enhanced Protection Level E
® *See www.AMCA.org for all certified or listed products*
This label does not signify AMCA airflow performance certification.

Nailor Industries Inc. certifies that the 1609H shown herein is approved to bear the AMCA International Listing Label. The ratings shown are based on tests and procedures performed in accordance with AMCA publications and comply with the requirements of the AMCA International Listing Label program. The AMCA International Listing Label applies to pressure cycle tested wind borne debris impact resistant louvers rated for 'Enhanced Protection' and +/- 70PSF with a minimum blade span of 12 in. (305mm) and a maximum unsupported blade span of 59 in. (1499 mm) and to High Velocity Wind-Driven Rain Resistant Louvers tested in the fully open position that permits airflow through a louver.

SCHEDULE TYPE:
PROJECT:
ENGINEER:
CONTRACTOR:

Dimensions are in inches (mm).

DATE	B SERIES	SUPERSEDES	DRAWING NO.
5 - 28 - 25	1600M	7 - 6 - 21	1609H

Nailor Industries Inc. reserves the right to change any information concerning product or pricing without notice.

Nailor® Industries Inc.

EXTRUDED ALUMINUM STATIONARY HYBRID LOUVER
MIAMI-DADE QUALIFIED • FLORIDA PRODUCT APPROVED
HIGH VELOCITY WIND-DRIVEN RAIN AND IMPACT RESISTANT
9" (229) DEEP • HORIZONTAL AND VERTICAL BLADE
MODEL: 1609HM

QUALIFICATIONS:

- **Miami-Dade County 26-0518.05**
- **Florida Product Approval 41947.1**
- **Tested in accordance with: TAS-100A (Wind-Driven Rain Test), TAS-201 (Large Missile Impact Test), TAS-202 (Uniform Static Air Pressure Test), TAS-203 (Cyclic Wind Pressure Loading Test).**
- **AMCA 500-L (Wind-Driven Rain, Water Penetration, Air Performance).**
- **AMCA 540 (Wind-Borne Debris Impact Test [Enhanced "Level E" Protection]).**
- **AMCA 550 (High Velocity Wind-Driven Rain Resistance Test).**
- **Wind load rating +/– 160 PSF.**

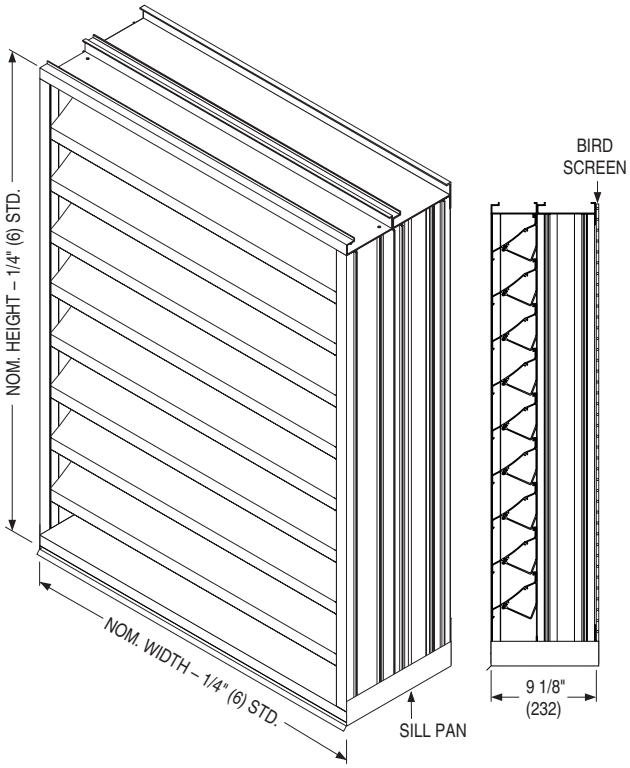

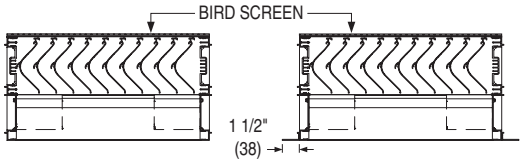

FLANGED FRAME FL (OPTIONAL)

STANDARD CONSTRUCTION:

FRAME:	**Front:** 4" (102) deep, Type 6063-T6 extruded aluminum, .080" (2.03) nominal wall thickness. Integral caulking slot provided.
	Rear: 5" (127) deep, Type 6063-T6 extruded aluminum, .080" (2.03) nominal wall thickness. Integral downspouts provided.
BLADES:	**Front:** Horizontal Type 6063-T6 extruded aluminum, .080" (2.03) nominal wall thickness, with reinforcing bosses. J style. Fixed at 37 degrees.
	Rear: Vertical Type 6063-T6 extruded aluminum, .060" (1.52) nominal wall thickness, with reinforcing bosses.
BLADE SPACING:	**Front:** Approx. 4" (102) on centers. **Rear:** Approx. 1 1/2" (38) on centers.
BLADE SUPPORT:	**Front:** Concealed type, factory installed on rear of louver on maximum 60" (1524) centers.
	Rear: 2.5" (64) strap every 60" (1524) or less in height.
SCREEN:	3/4" x .050 (19 x 1.3) expanded, flattened aluminum bird screen in removable frame, inside (rear) mount (adds approximately 3/8" [10] to louver depth).
SILL PAN:	Aluminum sill pan with end dams. (louver width undersized an additional 1/4" (6) to accommodate sill pan).
FINISH:	Mill.
MINIMUM SIZE:	12" W x 12" H (305 x 305).
MAXIMUM SINGLE SECTION SIZE:	60" W x 120" H (1524 x 3048). 50 sq. ft. (4.6 m^2). Larger louvers will require field assembly of smaller sections.
MAXIMUM SIZE:	Unlimited Width x 120" H (3048).

OPTIONS:

- ❑ **BSSS** Type 304 S. S. Bird Screen.
- ❑ **BSN** No Bird Screen.
- ❑ **ISSS** Type 304 S. S. Insect Screen.
- ❑ **ISA** Aluminum Insect Screen.
- ❑ **FL15** Flanged Frame, 1 1/2" (38).
- ❑ **FL20** Flanged Frame, 2" (51).
- ❑ Other: _____ .

OPTIONAL FINISHES:

- ❑ **PC3** Powder Coat AAMA 2603. Color: _____ .
- ❑ **PC4** High Performance Powder Coat AAMA 2604 (Equivalent to 50% Kynar®). Color: _____ .
- ❑ **PC5** Fluoropolymer Powder Coat AAMA 2605 (Equivalent to 70% Kynar®). Color: _____ .
- ❑ **PCC** Prime Coat.
- ❑ **AN04** Clear Anodized 204-R1.
- ❑ **AN15** Clear Anodized 215-R1.

SCHEDULE TYPE:	Page 1 of 3 Dimensions are in inches (mm).			
PROJECT:				
ENGINEER:	**DATE**	**B SERIES**	**SUPERSEDES**	**DRAWING NO.**
CONTRACTOR:	**6 - 29 - 26**	**1600M**	**4 - 12 - 24**	**1609HM**

Nailor Industries Inc. reserves the right to change any information concerning product or pricing without notice.

Nailor® Industries Inc.

EXTRUDED ALUMINUM STATIONARY HYBRID LOUVER
MIAMI-DADE QUALIFIED • FLORIDA PRODUCT APPROVED
HIGH VELOCITY WIND-DRIVEN RAIN AND IMPACT RESISTANT
9" (229) DEEP • HORIZONTAL AND VERTICAL BLADE
PERFORMANCE DATA
MODEL: 1609HM

FREE AREA in Square Feet and Square Meters

Height in Inches and Meters	Width in Inches and Meters								
	12 0.30	18 0.46	24 0.61	30 0.76	36 0.91	42 1.07	48 1.22	54 1.37	60 1.52
12 0.30	0.21 0.02	0.39 0.04	0.56 0.05	0.73 0.07	0.90 0.08	1.07 0.10	1.24 0.12	1.41 0.13	1.58 0.15
18 0.46	0.42 0.04	0.76 0.07	1.10 0.10	1.44 0.13	1.78 0.17	2.12 0.20	2.46 0.23	2.80 0.26	3.13 0.29
24 0.61	0.63 0.06	1.14 0.11	1.65 0.15	2.15 0.20	2.66 0.25	3.17 0.29	3.67 0.34	4.18 0.39	4.69 0.44
30 0.76	0.84 0.08	1.52 0.14	2.19 0.20	2.87 0.27	3.54 0.33	4.21 0.39	4.89 0.45	5.56 0.52	6.24 0.58
36 0.36	1.05 0.10	1.89 0.18	2.74 0.25	3.58 0.33	4.42 0.41	5.26 0.49	6.10 0.57	6.95 0.65	7.79 0.72
42 1.07	1.26 0.12	2.27 0.21	3.28 0.30	4.29 0.40	5.30 0.49	6.31 0.59	7.32 0.68	8.33 0.77	9.34 0.87
48 1.22	1.47 0.14	2.65 0.25	3.83 0.36	5.00 0.46	6.18 0.57	7.36 0.68	8.53 0.79	9.71 0.90	10.89 1.01
54 1.37	1.68 0.16	3.03 0.28	4.37 0.41	5.72 0.53	7.06 0.66	8.41 0.78	9.75 0.91	11.09 1.03	12.44 1.16
60 1.52	1.89 0.18	3.40 0.32	4.92 0.46	6.43 0.60	7.94 0.74	9.45 0.88	10.97 1.02	12.48 1.16	13.99 1.30
66 1.68	2.10 0.20	3.78 0.35	5.46 0.51	7.14 0.66	8.82 0.82	10.50 0.98	12.18 1.13	13.86 1.29	15.54 1.44
72 1.83	2.31 0.21	4.16 0.39	6.01 0.56	7.85 0.73	9.70 0.90	11.55 1.07	13.40 1.24	15.24 1.42	17.09 1.59
78 1.98	2.52 0.23	4.53 0.42	6.55 0.61	8.57 0.80	10.58 0.98	12.60 1.17	14.61 1.36	16.63 1.54	18.64 1.73
84 2.13	2.73 0.25	4.91 0.46	7.10 0.66	9.28 0.86	11.46 1.06	13.64 1.27	15.83 1.47	18.01 1.67	20.19 1.88
90 2.29	2.94 0.27	5.29 0.49	7.64 0.71	9.99 0.93	12.34 1.15	14.69 1.36	17.04 1.58	19.39 1.80	21.75 2.02
96 2.44	3.15 0.29	5.67 0.53	8.19 0.76	10.70 0.99	13.22 1.23	15.74 1.46	18.26 1.70	20.78 1.93	23.30 2.16
102 2.59	3.36 0.31	6.04 0.56	8.73 0.81	11.42 1.06	14.10 1.31	16.79 1.56	19.47 1.81	22.16 2.06	24.85 2.31
108 2.74	3.57 0.33	6.42 0.60	9.27 0.86	12.13 1.13	14.98 1.39	17.84 1.66	20.69 1.92	23.54 2.19	26.40 2.45
114 2.90	3.78 0.35	6.80 0.63	9.82 0.91	12.84 1.19	15.86 1.47	18.88 1.75	21.91 2.04	24.93 2.32	27.95 2.60
120 3.05	3.99 0.37	7.18 0.67	10.36 0.96	13.55 1.26	16.74 1.56	19.93 1.85	23.12 2.15	26.31 2.44	29.50 2.74

SCHEDULE TYPE:	Page 2 of 3 Dimensions are in inches (mm).			
PROJECT:				
ENGINEER:	**DATE**	**B SERIES**	**SUPERSEDES**	**DRAWING NO.**
CONTRACTOR:	**6 - 29 - 26**	**1600M**	**4 - 12 - 24**	**1609HM**

Nailor Industries Inc. reserves the right to change any information concerning product or pricing without notice.

Nailor® Industries Inc.

EXTRUDED ALUMINUM STATIONARY HYBRID LOUVER
MIAMI-DADE QUALIFIED • FLORIDA PRODUCT APPROVED
HIGH VELOCITY WIND-DRIVEN RAIN AND IMPACT RESISTANT
9" (229) DEEP • HORIZONTAL AND VERTICAL BLADE
PERFORMANCE DATA
MODEL: 1609HM

AIRFLOW/ WATER PENETRATION DATA
for 48" x 48" (1219 x 1219) Louver Size

Free Area %		53%
Free Area sq. ft. (sq. m.)		8.53 (0.79)
INTAKE	Free Area Velocity at Point of Beginning Water Penetration at .01 oz./sq. ft. (3 ml/sq. m) (15 min. test duration)	1011 fpm (308 m/min.)
INTAKE	Air Volume at 1011 fpm Free Area Velocity	8,624 cfm (4070 l/s)
INTAKE	Pressure Drop @ 1011 fpm	.34 in. w.g. (85 Pa)

NOTE: To minimize water penetration when sizing intake louvers, select a Free Area Velocity that is **below** the beginning point of water penetration.

WIND DRIVEN RAIN PERFORMANCE

Core Ventilation Rate in fpm (m/s)	0 (0.00)	99 (0.50)	198 (1.01)	297 (1.51)	393 (2.00)	494 (2.51)	590 (3.00)	690 (3.51)	789 (4.01)	889 (4.52)	985 (5.00)
Free Area Ventilation Rate in fpm (m/s)	0 (0.00)	174 (0.88)	348 (1.77)	522 (2.65)	690 (3.51)	868 (4.41)	1036 (5.26)	1212 (6.16)	1386 (7.04)	1561 (7.93)	1730 (8.79)
Effectiveness Ratio (%)	100	100	100	100	100	100	100	100	100	100	99.9
Penetration Class	A	A	A	A	A	A	A	A	A	A	A

Test was based on a 39.375" x 39.375" (1.0 m x 1.0 m) core area louver tested at a rainfall rate of 3" per hour (76 mm/hour) with a wind velocity of **29 mph (13 m/s).**
DISCHARGE LOSS COEFFICIENT CLASS (INTAKE): 3. (Discharge Loss Coefficient Classification is as follows: 1=0.4 and above, 2=0.3 to 0.399, 3 = 0.2 to 0.299, 4 = 0.199 and below.)

Core Ventilation Rate in fpm (m/s)	0 (0.00)	96 (0.49)	197 (1.00)	288 (1.46)	396 (2.01)	482 (2.45)	593 (3.01)	691 (3.51)	793 (4.03)	894 (4.54)	988 (5.02)
Free Area Ventilation Rate in fpm (m/s)	0 (0.00)	169 (0.86)	346 (1.76)	506 (2.57)	696 (3.54)	847 (4.30)	1042 (5.29)	1214 (6.17)	1393 (7.08)	1570 (7.98)	1735 (8.81)
Effectiveness Ratio (%)	100	100	100	100	100	100	99.8	99.6	99.1	98.5	97.9
Penetration Class	A	A	A	A	A	A	A	A	A	B	B

Test was based on a 39.375" x 39.375" (1.0 m x 1.0 m) core area louver tested at a rainfall rate of 8" per hour (203 mm/hour) with a wind velocity of **50 mph (22 m/s).**
DISCHARGE LOSS COEFFICIENT CLASS (INTAKE): 3. (Discharge Loss Coefficient Classification is as follows: 1=0.4 and above, 2=0.3 to 0.399, 3 = 0.2 to 0.299, 4 = 0.199 and below.)

PRESSURE DROP

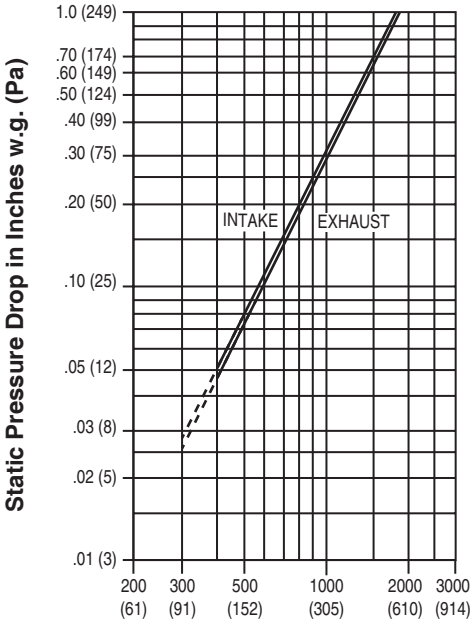

Air Velocity in Feet (Meters) Per Minute Through Free Area

Louver test size: 48" x 48" (1219 x 1219 mm).
Standard air density @ 0.075 lbs/ft³.
Tested to AMCA Fig. 5.5 – 6.5.

Nailor Industries Inc. certifies that the Model 1609HM shown herein is licensed to bear the AMCA Certified Ratings Program seal. The ratings shown are based on tests and procedures performed in accordance with AMCA Publication 511 and comply with the requirements of the AMCA Certified Ratings Program. The AMCA Certified Ratings Program seal applies to air performance, water penetration and wind driven rain performance ratings.

Louvers were tested in accordance with AMCA Standard 500-L.

HIGH VELOCITY RAIN RESISTANT WITH BLADES FULLY OPEN AND IMPACT RESISTANT LOUVER
Enhanced Protection Level E
See www.AMCA.org for all certified or listed products
This label does not signify AMCA airflow performance certification.

Nailor Industries Inc. certifies that the 1609HM shown herein is approved to bear the AMCA International Listing Label. The ratings shown are based on tests and procedures performed in accordance with AMCA publications and comply with the requirements of the AMCA International Listing Label program. The AMCA International Listing Label applies to pressure cycle tested wind borne debris impact resistant louvers rated for 'Enhanced Protection' and +/- 160PSF with a minimum blade span of 12 in. (305mm) and a maximum unsupported blade span of 59 in. (1499 mm) and to High Velocity Wind-Driven Rain Resistant Louvers tested in the fully open position that permits airflow through a louver.

Dimensions are in inches (mm).

SCHEDULE TYPE:				
PROJECT:				
ENGINEER:	**DATE**	**B SERIES**	**SUPERSEDES**	**DRAWING NO.**
CONTRACTOR:	**6 - 29 - 26**	**1600M**	**4 - 12 - 24**	**1609HM**

Nailor Industries Inc. reserves the right to change any information concerning product or pricing without notice.

Nailor® Industries Inc.

EXTRUDED ALUMINUM STATIONARY LOUVER
MIAMI-DADE QUALIFIED • FLORIDA PRODUCT APPROVED
HIGH VELOCITY WIND-DRIVEN RAIN RESISTANT
5" (127) DEEP • VERTICAL BLADE
MODEL: 1675WDVM

QUALIFICATIONS:

- **Miami-Dade County NOA No. : 26-0518.06**
- **Florida Product Approval No. : 41441.4**
- **Texas Department of Insurance Evaluation ID: LVR-26**
- **Tested in accordance with: TAS-100A (Wind-Driven Rain Test), TAS-201 (Large Missile Impact Test), TAS-202 (Uniform Static Air Pressure Test), TAS-203 (Cyclic Wind Pressure Loading Test).**
- **AMCA 500-L (Wind-Driven Rain, Water Penetration, Air Performance).**
- **AMCA 540 (Wind-Borne Debris Impact Test [Enhanced "Level E" Protection]).**
- **AMCA 550 (High Velocity Wind-Driven Rain Resistance Test).**
- **Wind load rating +/– 150 PSF.**

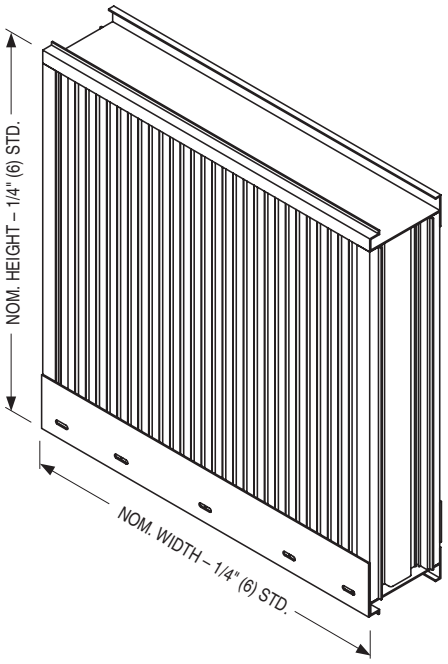

STANDARD CONSTRUCTION:

FRAME: 5" (127) deep, Type 6063-T6 extruded aluminum, .080" (2.03) nominal wall thickness. Integral downspouts and caulking slot provided.

BLADES: Type 6063-T6 extruded aluminum, .063" (1.6) nominal wall thickness, with reinforcing bosses.

BLADE ANGLE: Fixed at 45 degrees.

BLADE SPACING: Approximately 3/4" (19) on centers.

BLADE SUPPORT: 2.5" (64) strap every 60" (1524) or less in height.

SCREEN: 3/4" x .050 (19 x 1.3) expanded, flattened aluminum bird screen in removable frame, inside (rear) mount (adds approximately 3/8" [10] to louver depth).

FINISH: Mill.

MINIMUM SIZE: 12" W x 12" H (305 x 305).

MAX. SINGLE SECTION SIZE: 48" W x 120" H (1219 x 3048) or 120" W x 48" H (3048 x 1219). 40 sq. ft. (3.7 m²). Larger louvers will require field assembly of smaller sections.

MAXIMUM SIZE: Unlimited Width x 120" H (3048).

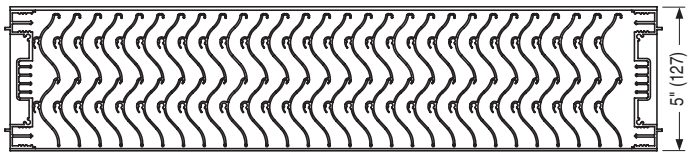

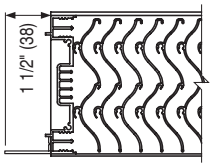

OPT. FLANGED FRAME (FL15 STD.)

OPTIONS:

- ❑ **FL15** Flanged Frame, 1 1/2" (38).
- ❑ **FL20** Flanged Frame, 2" (51).
- ❑ **BSSS** Type 304 S.S. Bird Screen.
- ❑ **BSN** No Bird Screen.
- ❑ **ISA** Aluminum Insect Screen.
- ❑ **ISSS** Type 304 S.S. Insect Screen.
- ❑ **ESI** Extended Sill.
- ❑ **PASI** Sill Pan.
- ❑ Other: _____ .

OPTIONAL FINISHES:

- ❑ **PC3** Powder Coat AAMA 2603. Color: ____ .
- ❑ **PC4** High Performance Powder Coat AAMA 2604 (Equivalent to 50% Kynar®). Color: ____ .
- ❑ **PC5** Fluoropolymer Powder Coat AAMA 2605 (Equivalent to 70% Kynar®). Color: ____ .
- ❑ **PCC** Prime Coat.
- ❑ **AN04** Clear Anodized 204-R1.
- ❑ **AN15** Clear Anodized 215-R1.
- ❑ **ANLB** Light Bronze.
- ❑ **ANMB** Medium Bronze.
- ❑ **ANDB** Dark Bronze.
- ❑ **ANBK** Black.

For Installation Instructions, see approved NOA.

SCHEDULE TYPE:	Page 1 of 3 Dimensions are in inches (mm).			
PROJECT:				
ENGINEER:	**DATE**	**B SERIES**	**SUPERSEDES**	**DRAWING NO.**
CONTRACTOR:	**6 - 29 - 26**	**1600M**	**3 - 27 - 26**	**1675WDVM**

Nailor Industries Inc. reserves the right to change any information concerning product or pricing without notice.

Nailor® Industries Inc.

EXTRUDED ALUMINUM STATIONARY LOUVER
MIAMI-DADE QUALIFIED • FLORIDA PRODUCT APPROVED
HIGH VELOCITY WIND-DRIVEN RAIN RESISTANT
5" (127) DEEP • VERTICAL BLADE • PERFORMANCE DATA
MODEL: 1675WDVM

FREE AREA in Square Feet and Square Meters

Height in Inches and Meters	Width in Inches and Meters																	
	12 0.30	**18** 0.46	**24** 0.61	**30** 0.76	**36** 0.91	**42** 1.07	**48** 1.22	**54** 1.37	**60** 1.52	**66** 1.68	**72** 1.83	**78** 1.98	**84** 2.13	**90** 2.29	**96** 2.44	**102** 2.59	**108** 2.74	**114** 2.90	**120** 3.05
12 0.30	**0.30** 0.03	**0.50** 0.05	**0.70** 0.06	**0.89** 0.08	**1.09** 0.10	**1.29** 0.12	**1.49** 0.14	**1.69** 0.16	**1.89** 0.18	**2.09** 0.19	**2.28** 0.21	**2.48** 0.23	**2.68** 0.25	**2.88** 0.27	**3.08** 0.29	**3.28** 0.30	**3.48** 0.32	**3.67** 0.34	**3.87** 0.36
18 0.46	**0.52** 0.05	**0.86** 0.08	**1.21** 0.11	**1.55** 0.14	**1.90** 0.18	**2.24** 0.21	**2.59** 0.24	**2.93** 0.27	**3.28** 0.30	**3.63** 0.34	**3.97** 0.37	**4.32** 0.40	**4.66** 0.43	**5.01** 0.47	**5.35** 0.50	**5.70** 0.53	**6.04** 0.56	**6.39** 0.59	**6.73** 0.63
24 0.61	**0.63** 0.06	**1.06** 0.10	**1.48** 0.14	**1.90** 0.18	**2.33** 0.22	**2.75** 0.26	**3.17** 0.29	**3.60** 0.33	**4.02** 0.37	**4.44** 0.41	**4.87** 0.45	**5.29** 0.49	**5.71** 0.53	**6.14** 0.57	**6.56** 0.61	**6.98** 0.65	**7.41** 0.69	**7.83** 7.00	**8.25** 0.77
30 0.76	**0.85** 0.08	**1.42** 0.13	**1.99** 0.19	**2.56** 0.24	**3.13** 0.29	**3.70** 0.34	**4.27** 0.40	**4.84** 0.45	**5.41** 0.50	**5.98** 0.56	**6.55** 0.61	**7.12** 0.66	**7.69** 0.71	**8.26** 0.77	**8.83** 0.82	**9.40** 0.87	**9.97** 0.93	**10.54** 0.98	**11.11** 1.03
36 0.36	**1.07** 0.10	**1.79** 0.17	**2.51** 0.23	**3.22** 0.30	**3.94** 0.37	**4.66** 0.43	**5.37** 0.50	**6.09** 0.57	**6.81** 0.63	**7.52** 0.70	**8.24** 0.77	**8.96** 0.83	**9.67** 0.90	**10.39** 0.97	**11.11** 1.03	**11.82** 1.10	**12.54** 1.16	**13.26** 1.23	**13.97** 1.30
42 1.07	**1.29** 0.12	**2.16** 0.20	**3.02** 0.28	**3.88** 0.36	**4.75** 0.44	**5.61** 0.52	**6.47** 0.60	**7.34** 0.68	**8.20** 0.76	**9.06** 0.84	**9.93** 0.92	**10.79** 1.00	**11.65** 1.08	**12.52** 1.16	**13.38** 1.24	**14.24** 1.32	**15.11** 1.40	**15.97** 1.48	**16.83** 1.56
48 1.22	**1.51** 0.14	**2.52** 0.23	**3.53** 0.33	**4.54** 0.42	**5.55** 0.52	**6.56** 0.61	**7.57** 0.70	**8.58** 0.80	**9.59** 0.89	**10.60** 0.99	**11.61** 1.08	**12.62** 1.17	**13.63** 1.27	**14.64** 1.36	**15.65** 1.45	**16.66** 1.55	**17.67** 1.64	**18.68** 1.74	**19.69** 1.83
54 1.37	**1.73** 0.16	**2.89** 0.27	**4.05** 0.38	**5.20** 0.48	**6.36** 0.59	**7.52** 0.70	**8.67** 0.81												
60 1.52	**1.95** 0.18	**3.26** 0.30	**4.56** 0.42	**5.86** 0.54	**7.17** 0.67	**8.47** 0.79	**9.77** 0.91												
66 1.68	**2.17** 0.20	**3.62** 0.34	**5.07** 0.47	**6.52** 0.61	**7.97** 0.74	**9.42** 0.88	**10.87** 1.01												
72 1.83	**2.39** 0.22	**3.99** 0.37	**5.59** 0.52	**7.18** 0.67	**8.78** 0.82	**10.38** 0.96	**11.97** 1.11												
78 1.98	**2.61** 0.24	**4.36** 0.40	**6.10** 0.57	**7.84** 0.73	**9.59** 0.89	**11.33** 1.05	**13.07** 1.21												
84 2.13	**2.83** 0.26	**4.72** 0.44	**6.61** 0.61	**8.50** 0.79	**10.39** 0.97	**12.28** 1.14	**14.17** 1.32												
90 2.29	**3.05** 0.28	**5.09** 0.47	**7.13** 0.66	**9.16** 0.85	**11.20** 1.04	**13.24** 1.23	**15.27** 1.42												
96 2.44	**3.27** 0.30	**5.46** 0.51	**7.64** 0.71	**9.82** 0.91	**12.01** 1.12	**14.19** 1.32	**16.37** 1.52												
102 2.59	**3.49** 0.32	**5.82** 0.54	**8.15** 0.76	**10.48** 0.97	**12.81** 1.19	**15.14** 1.41	**17.47** 1.62												
108 2.74	**3.71** 0.35	**6.19** 0.58	**8.67** 0.81	**11.14** 1.04	**13.62** 1.27	**16.10** 1.50	**18.57** 1.73												
114 2.90	**3.93** 0.37	**6.56** 0.61	**9.18** 0.85	**11.80** 1.10	**14.43** 1.34	**17.05** 1.58	**19.67** 1.83												
120 3.05	**4.15** 0.39	**6.92** 0.64	**9.69** 0.90	**12.46** 1.16	**15.23** 1.42	**18.00** 1.67	**20.77** 1.93												

SCHEDULE TYPE:	Page 2 of 3			
PROJECT:	Dimensions are in inches (mm).			
ENGINEER:	**DATE**	**B SERIES**	**SUPERSEDES**	**DRAWING NO.**
CONTRACTOR:	**6 - 29 - 26**	**1600M**	**3 - 27 - 26**	**1675WDVM**

Nailor Industries Inc. reserves the right to change any information concerning product or pricing without notice.

Nailor® Industries Inc.

EXTRUDED ALUMINUM STATIONARY LOUVER
MIAMI-DADE QUALIFIED • FLORIDA PRODUCT APPROVED
HIGH VELOCITY WIND-DRIVEN RAIN RESISTANT
5" (127) DEEP • VERTICAL BLADE • PERFORMANCE DATA
MODEL: 1675WDVM

AIRFLOW / WATER PENETRATION DATA
for 48" x 48" (1219 x 1219) Louver Size

Free Area %		47%
Free Area sq. ft. (sq. m.)		7.57 (0.70)
INTAKE	Free Area Velocity at Point of Beginning Water Penetration at .01 oz./sq. ft. (3 ml/sq. m) (15 min. test duration)	1250 fpm (381 m/min.)*
INTAKE	Air Volume at 1250 fpm Free Area Velocity	9463 cfm (4466 l/s)
INTAKE	Pressure Drop @ 1250 fpm	.38 in. w.g. (95 Pa)

NOTE: To minimize water penetration when sizing intake louvers, select a Free Area Velocity that is **below** the beginning point of water penetration.*Maximum Free Area Velocity tested is 1250 fpm. Beginning point of water penetration for this model is above 1250 fpm.

WIND DRIVEN RAIN PERFORMANCE

Core Ventilation Rate in fpm (m/s)	0 (0.00)	110 (0.56)	195 (0.99)	279 (1.42)	396 (2.01)	497 (2.52)	588 (2.99)	701 (3.56)	781 (3.97)	891 (4.53)	981 (4.98)
Free Area Ventilation Rate in fpm (m/s)	0 (0.00)	212 (1.08)	375 (1.91)	537 (2.73)	762 (3,87)	957 (4.86)	1132 (5.75)	1349 (6.85)	1503 (7.63)	1715 (8.71)	1888 (9.59)
Effectiveness Ratio (%)	100	100	100	100	100	100	100	100	100	100	100
Penetration Class	A	A	A	A	A	A	A	A	A	A	A

Test was based on a 39.375" x 39.375" (1.0 m x 1.0 m) core area louver tested at a rainfall rate of 3" per hour (76 mm/hour) with a wind velocity of **29 mph (13 m/s).**
DISCHARGE LOSS COEFFICIENT CLASS (INTAKE): 3. (Discharge Loss Coefficient Classification is as follows: 1=0.4 and above, 2=0.3 to 0.399, 3 = 0.2 to 0.299, 4 = 0.199 and below.)

Core Ventilation Rate in fpm (m/s)	0 (0.00)	88 (0.45)	199 (1.01)	301 (1.53)	400 (2.03)	485 (2.46)	590 (3.00)	687 (3.49)	787 (4.00)	883 (4.49)	987 (5.01)
Free Area Ventilation Rate in fpm (m/s)	0 (0.00)	169 (0.86)	383 (1.95)	579 (2.94)	770 (3.91)	934 (4.74)	1136 (5.77)	1322 (6.72)	1515 (7.70)	1700 (8.64)	1900 (9.65)
Effectiveness Ratio (%)	100	100	100	100	100	100	100	100	100	100	100
Penetration Class	A	A	A	A	A	A	A	A	A	A	A

Test was based on a 39.375" x 39.375" (1.0 m x 1.0 m) core area louver tested at a rainfall rate of 8" per hour (203 mm/hour) with a wind velocity of **50 mph (22 m/s).**
DISCHARGE LOSS COEFFICIENT CLASS (INTAKE): 3. (Discharge Loss Coefficient Classification is as follows: 1=0.4 and above, 2=0.3 to 0.399, 3 = 0.2 to 0.299, 4 = 0.199 and below.)

PRESSURE DROP

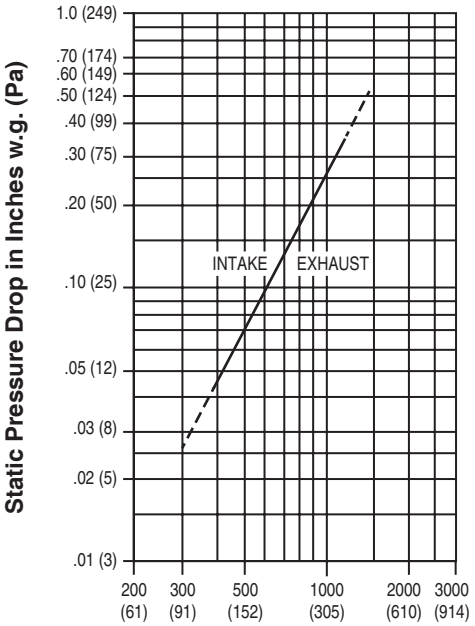

Air Velocity in Feet (Meters) Per Minute Through Free Area

Louver test size: 48" x 48" (1219 x 1219 mm).
Standard air density @ 0.075 lbs/ft³.
Tested to AMCA Fig. 5.5 – 6.5.

amca WORLDWIDE CERTIFIED RATINGS — WATER PENETRATION, AIR PERFORMANCE, WIND DRIVEN RAIN — AIR MOVEMENT AND CONTROL ASSOCIATION INTERNATIONAL, INC. www.amca.org

Nailor Industries Inc. certifies that the Model 1675WDVM shown herein is licensed to bear the AMCA Certified Ratings Program seal. The ratings shown are based on tests and procedures performed in accordance with AMCA Publication 511 and comply with the requirements of the AMCA Certified Ratings Program. The AMCA Certified Ratings Program seal applies to Water Penetration, Wind Driven Rain and Air Performance ratings.

Louvers were tested in accordance with AMCA Standard 500-L.

amca INTERNATIONAL LISTED — HIGH VELOCITY RAIN RESISTANT WITH BLADES FULLY OPEN AND IMPACT RESISTANT LOUVER *Enhanced Protection Level E* — *See www.AMCA.org for all certified or listed products* — This label does not signify AMCA airflow performance certification.

Nailor Industries Inc. certifies that the 1675WDVM louver shown herein is approved to bear the AMCA International Listing Label. The ratings shown are based on tests and procedures performed in accordance with AMCA publications and comply with the requirements of the AMCA International Listing Label program. The AMCA International Listing Label applies to pressure cycle tested wind borne debris impact resistant louvers rated for Enhanced Protection and +/- 150PSF with a minimum blade span of less than 12 in. (305mm) and a maximum unsupported blade span of 58 in. (1473 mm) and to High Velocity Wind-Driven Rain Resistant Louvers tested in the fully open position that permits airflow through a louver.

SCHEDULE TYPE:	Page 3 of 3			
PROJECT:	Dimensions are in inches (mm).			
ENGINEER:	**DATE**	**B SERIES**	**SUPERSEDES**	**DRAWING NO.**
CONTRACTOR:	**6 - 29 - 26**	**1600M**	**3 - 27 - 26**	**1675WDVM**

Nailor Industries Inc. reserves the right to change any information concerning product or pricing without notice.

CURTAINWALL/WINDOW GLAZING ADAPTOR
EXTRUDED ALUMINUM
OPTION CODE: GA

APPLICATION:

Glazing adaptor for louver installation in common curtainwall and window systems. The 1" (25) deep adaptor is factory installed onto louver frame and is suitable for use on 2" (51), 4" (102) and 6" (152) deep extruded aluminum louver models.

STANDARD CONSTRUCTION:

MATERIAL: Type 6063-T6 extruded aluminum, .081" (2.06) nominal thickness.

FINISH: Mill.

TYPICAL INSTALLATION:

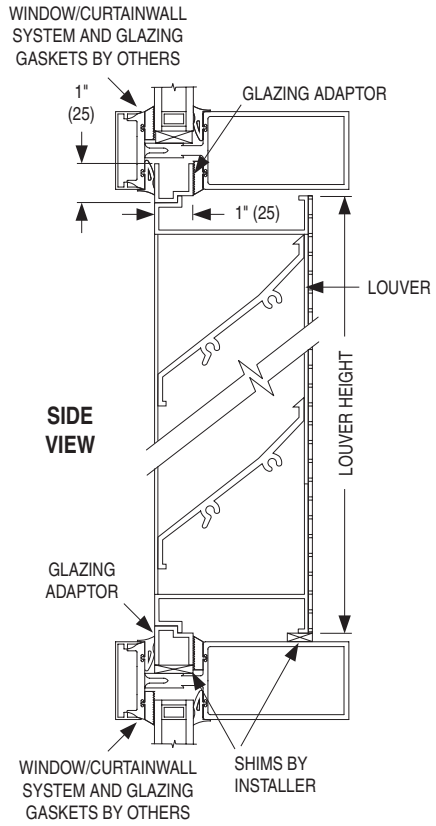

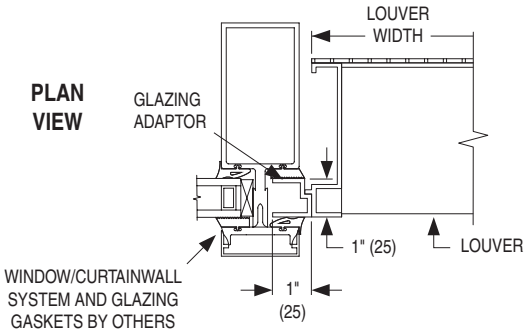

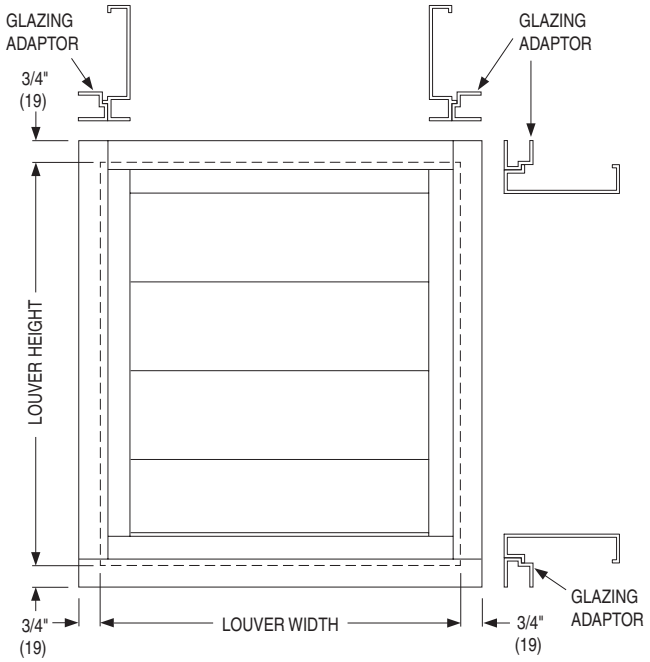

SCHEDULE TYPE:	Dimensions are in inches (mm)			
PROJECT:				
ENGINEER:	**DATE**	**B SERIES**	**SUPERSEDES**	**DRAWING NO.**
CONTRACTOR:	**2 - 17 - 22**	**1600**	**7 - 11 - 13**	**1600GA**

Nailor Industries Inc. reserves the right to change any information concerning product or pricing without notice.

LOUVER ACCESSORIES
MODEL SERIES: 1600 & 1700
ESI EXTENDED SILL & PASI SILL PAN

❑ **ESI** Extended Sill

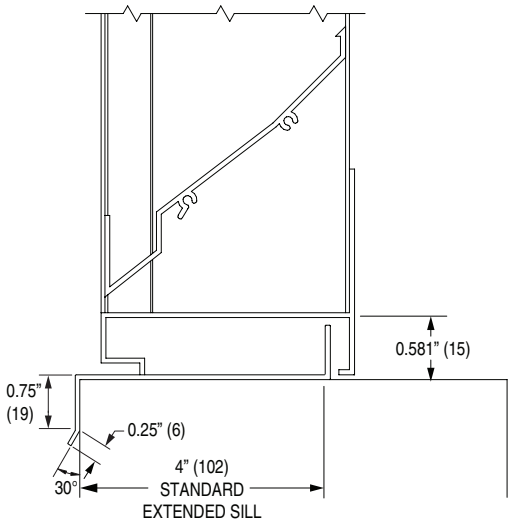

❑ **PASI** Sill Pan (Extended Sill with End Dams)

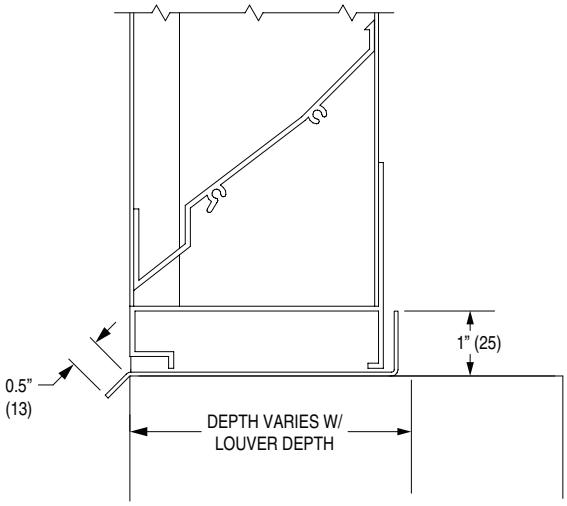

SILL PAN (Side View)

*Shipped in sections for multiple section width louvers where necessary.

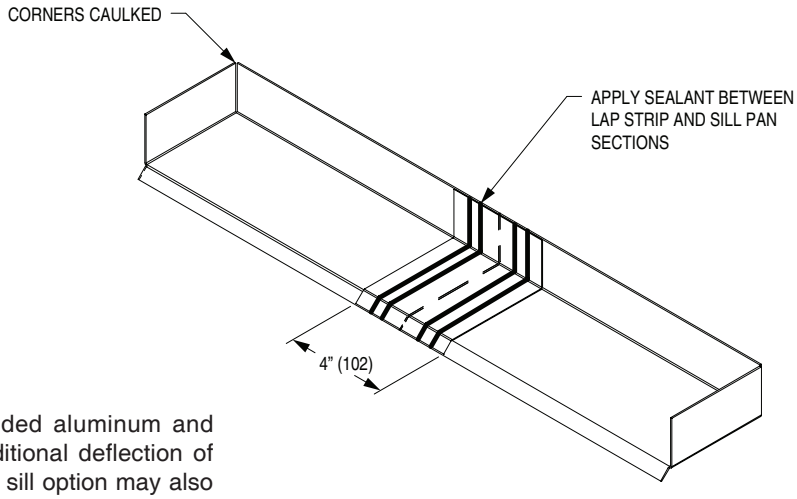

APPLICATION:

Sill extensions are available on all Nailor extruded aluminum and formed steel louver models and can provide additional deflection of water away from the louver opening. An extended sill option may also provide a transition between the louver and adjacent structures.

NOTES:

1. The finish will match the louver.
2. When ordered, sill extensions are shipped loose for field installation.
3. Customization available upon request.

MATERIALS:

1. **ESI** Extended Sill 6063-T6 0.081" (2.1) thick extruded aluminum.
2. **PASI** Extended Sill 5052-H32 0.060" (1.5) thick formed aluminum

SCHEDULE TYPE:	Dimensions are in inches (mm).			
PROJECT:				
ENGINEER:	**DATE**	**B SERIES**	**SUPERSEDES**	**DRAWING NO.**
CONTRACTOR:	**1 - 29 - 26**	**ACC-ESI**	**New**	**ACC-ESI**

Nailor Industries Inc. reserves the right to change any information concerning product or pricing without notice.

Louver Finishes & Color Guide

Slate Blue **LF01**	Medium Bronze **LF02**	Sandstone **LF03**
Light Gray **LF04**	Charcoal **LF05**	Bone White **LF06**
Western Tan **LF07**	Architectural Bronze **LF08**	Regal Blue **LF09**
Forest Green **LF10**	Surrey Beige **LF11**	Royal Brown **LF12**
Barn Red **LF13**	Burgundy **LF14**	Clay **LF15**
Almond **LF16**	Coastal White **LF17**	Vista Green **LF18**
Black **LF19**	Gloss Black **LF20**	Campus Green **LF21**

Nailor offers 21 standard paint colors selected for architectural exterior use which meet or exceed AAMA specifications and performance requirements for color retention, chalk resistance, gloss retention, erosion, corrosion and chemical resistance as well as dry film thickness and hardness. Our state-of-the-art powder coat system provides an environment friendly finishing solution with more uniform coverage and coating thickness. The result is an exceptional finish that better resists scratching, fading and general wear. Additional liquid coat facilities for special requirements complete our ability to provide unmatched beauty and durability for any application.

Custom color matching is also available upon request. Contact your local Nailor representative.

Available Finishes

FINISH TYPE	DESCRIPTION	STANDARD WARRANTY
Fluoropolymer Powder Coat AAMA 2605-Superior Finish (AKA: Powdura® 5000, Coraflon® Powder, Interpon® D3000-Fluoromax, IFS 500FP)	**"Ultimate"** - A next generation hyper durable powder coating, based on FEVE fluoropolymer resins and ceramic pigmentation that the industry has acknowledged as the foundation for superior performance coatings. They provide a hard surface that is resistant to scratching and scuffing, with superior color and gloss retention, when applied to a variety of exterior architectural applications. This technology represents the "ultimate" in environmentally friendly finishes, with Zero-VOC emissions. A superior alternative to traditional 70% Kynar 500® / Hylar 500® PVDF fluoropolymer liquid coatings.	10 years (Consult Nailor for availability of extended warranty)
High Performance Powder Coat AAMA 2604 - High Performance Finish (AKA: Powdura® 4000, Envirocron® Ultra Durable Powder, Dynadure™ 400, Interpon® D2000, IFS 400SD)	**"Better"** - A high performance polyester powder coating, based on "super durable" resins that utilize infrared reflective pigments, which provides excellent resistance to outdoor weathering. A harder and more environmentally friendly coating than other liquid paint counterparts and with Zero-VOC emissions. A good alternative to 50% Kynar 500® / Hylar 5000® liquid coatings.	5 years
Durable Powder Coat AAMA 2603 - Pigmented Organic Coatings (AKA: Powdura® 3000, Envirocron® Durable Powder, Dynadure™ 300, Interpon® D1000, IFS 300SP)	**"Good"** - A durable powder coat based on thermosetting polyester resin technology. Provides a good economical combination of physical and chemical resistance properties. Environmentally superior to liquid spray paints and Zero – VOC emissions.	1 year
Clear Anodize 215-R1 AA-M10C22A41 (0.7 mil. min.)	Architectural Class I. Clear, colorless and hard oxide aluminum coating that resists weathering and chemical attack. Recommended for severely corrosive and abrasive atmospheric exposure.	5 years
Clear Anodize 204-R1 AA-M10C22A31 (0.4 - 0.7 mil.)	Architectural Class II. Clear, colorless and hard oxide aluminum coating that resists weathering and chemical attack. Recommended for normal weather exposure.	1 year
Color Anodize AA-M10C22A44 (0.7 mil. min.)	Architectural Class I. "Two-step" aluminum coating process. Following a standard anodizing procedure, a second electrolytic process deposits colored metallic pigments which penetrate the aluminum oxide pores, producing a corrosion resistant, colorfast finish. Available in light, medium, dark bronze and black.	5 years
Prime Coat	Prime coat provides a stable base for painting of louvers in the field. Surface pretreatment includes degreasing and a chemical cleaning before an epoxy prime coat is applied. Finish coat should be field applied as soon as possible for best adhesion, after a thorough cleaning for dust etc. that can contaminate the final finish and cause premature flaking or peeling.	N/A

Paint finish warranties are not applicable to steel products.

Powdura® is a registered trademark of The Sherwin-Williams Company.
Coraflon® and Envirocron® are registered trademarks of PPG Industries Ohio, Inc.
Interpon® is a registered trademark of Akzo Nobel Powder Coatings Ltd.
Kynar 500® is a registered trademark of Arkema, Inc.
Hylar 5000® is a registered trademark of Solvay Solexis, Inc.